GLOWA 2025 C
GLOWA 2530 C
GLOWA 3035 C
GLOWA 3540 C

CONDENSING COMBI BOILERS
INSTALLATION & SERVICE MANUAL

warmhaus

Code Of Practice

For the installation, commissioning and servicing of domestic heating and hot water products

Benchmark places responsibilities on both manufacturers and installers.* The purpose is to ensure that customers** are provided with the correct equipment for their needs, that it is installed, commissioned and serviced in accordance with the manufacturer's instructions by competent persons and that it meets the requirements of the appropriate Building Regulations. Installers are required to carry out work in accordance with the following:

Standards of Work

- Be competent and qualified to undertake the work required.
- Install, commission, service and use products in accordance with the manufacturer's instructions provided.
- Ensure that where there is responsibility for design work, the installation is correctly sized and fit for purpose.
- Meet the requirements of the appropriate Building Regulations. Where this involves notifiable work be a member of a Competent Persons Scheme or confirm that the customer has notified Local Authority Building Control (LABC), prior to work commencing.
- Complete all relevant sections of the Benchmark Checklist/Service Record when carrying out commissioning or servicing of a product or system.
- Ensure that the product or system is left in a safe condition and, whenever possible, in good working order.
- Highlight to the customer any remedial or improvement work identified during the course of commissioning or servicing work.
- Refer to the manufacturer's helpline where assistance is needed.
- Report product faults and concerns to the manufacturer in a timely manner.

Customer Service

- Show the customer any identity card that is relevant to the work being carried out prior to commencement or on request.
- Give a full and clear explanation/demonstration of the product or system and its operation to the customer.
- Hand over the manufacturer's instructions, including the Benchmark Checklist, to the customer on completion of an installation.
- Obtain the customer's signature, on the Benchmark Checklist, to confirm satisfactory demonstration and receipt of manufacturer's instructions.
- Advise the customer that regular product servicing is needed, in line with manufacturers' recommendations, to ensure that safety and efficiency is maintained.
- Respond promptly to calls from a customer following completion of work, providing advice and assistance by phone and, if necessary, visiting the customer.
- Rectify any installation problems at no cost to the customer during the installer's guarantee period.

benchmark
COLLECTIVE MARK
THE MARK OF QUALITY FOR THE INSTALLATION, COMMISSIONING AND SERVICING OF DOMESTIC HEATING AND HOT WATER SYSTEMS

*The use of the word "installer" is not limited to installation itself and covers those carrying out installation, commissioning and/or servicing of heating and hot water products, or the use of supporting products (such as water treatment or test equipment).
**Customer includes householders, landlords and tenants.

© Heating and Hotwater Industry Council (HHIC)

www.centralheating.co.uk



The Benchmark Scheme
Warmhaus is a licensed member of the Benchmark Scheme which aims to improve the standards of installation and commissioning of domestic heating and hot water systems in the UK and to encourage regular servicing to optimise safety, efficiency and performance.

Benchmark is managed and promoted by the Heating and Hotwater Industry Council.
For more information visit www.centralheating.co.uk

Please ensure that the installer has fully completed the Benchmark Checklist in the use and maintenance section of the installation instructions supplied with the product and that you have signed it to say that you have received a full and clear explanation of its operation.

The installer is legally required to complete a commissioning checklist as a means of complying with the appropriate Building Regulations (England and Wales).

All installations must be notified to Local Area Building Control either directly or through a Competent Persons Scheme.

A Building Regulations Compliance Certificate will then be issued to the customer who should, on receipt, write the Notification Number on the Benchmark Checklist.

This product should be serviced regularly to optimise its safety, efficiency and performance.

The service engineer should complete the relevant Service Record on the Benchmark Checklist after each service.

The Benchmark Checklist may be required in the event of any warranty work and as supporting documentation relating to home improvements in the optional documents section of the Home Information Pack

CONTENTS

1. INTRODUCTION 6
1.1. Boiler Description 6
1.2. Safety Instructions: 6
1.3. Technical Specification 8
1.4. Product Identification 9
1.5. Regulations 9
2. PRE-INSTALLATION 10
2.1. Packing Contents 10
2.2. Appliance Overview 10
2.3. Location of Boiler / Clearance 11
2.4. System Requirements 12
2.4.1. General 12
2.5. Water SUPPLY (only for Combi Boiler) 12
2.6. Gas Supply 12
2.6.1. By-pass 12
2.6.2. Ventilation 12
2.6.3. Primary system cleaning 12
2.7. Electric Supply 12
2.8. PRV Discharge 12
2.9. Exhaust Gas Flue Pipe Set and Accessories Connection 13
2.9.1. Installation with Horizontal Flue Sets 13
2.9.2. Peripheral Distances of Flue Output Connections 16
2.9.3. Installation with Horizontal Flue Sets 16
3. INSTALLATION 17
3.1. Unpacking Appliance 17
3.2. Appliance Position 17
3.3. Wall Mounting Template 17
3.4. Preparing the Wall – Drill Flue Hole 17
3.5. Installing Mounting Bracket 17
3.6. Hanging The Boiler 17
3.7. Appliance Connections 18
3.8. Filling Appliance & Adding Inhibitor 19
3.9. Installation with Horizontal Flue Sets 20
3.10. Installing the Flue System 21
3.11. Installation with Vertical Flue Sets (Ø60/100 mm) 23
3.12. Concentric Flue Kits For Condensing Boilers (Ø60/100 mm) 25
3.13. Plume Displacement Kits Ø60 mm 26
3.14. Recommendations of Plume Kit Installation 26
3.15. Condensate Connection 27
3.16. Glowa Combi Boiler Wiring Diagram 31
3.16.1. External Control Connection / Low Voltage Installation 32
3.16.2. External Control Connection / High Voltage (240 V) Installation 32
4. COMMISSIONING 33
4.1. Display Function 33
4.1.1. SET Transparent Parameters Menu (TSP) 33
4.1.2. Changing The Boiler Type: Combination Boiler to System Boiler 34
4.1.3. Parameters (Changing The Boiler Type, CH & DHW Power, Pre Heat switch off Temperature, CH post Circulation Time...) 34
4.2. Service Mode 37
4.3. CO/CO2 Combustion Check 38
4.4. Calibration 39
4.4.1. Auto Calibration 39
4.4.2. Deareation Mode 40
4.5. Information Menu Access 41
4.6. Pre-Commissioning Checklist 42
4.7. Checking Inlet Gas Pressure 42
4.8. Testing For Gas Leaks During Use 42
4.9. Check Gas Rate 42
4.10. Circulation Pump Rotation 43
4.11. Setting Up the External Controls 43
4.12. Gas conversion from NG (G20) to LPG (G31) 44
4.13. Gas conversion from LPG (G31) to NG (G20) 45
5. SERVICING & PART REPLACEMENT 46
5.1. Replacement of Components - First Stage 46
5.2. Replacement of Components - Final Stage 46
5.3. Draining The Boiler / CH Circuit 46
5.4. Draining The Boiler / DHW Circuit (only for combi boilers) 46
5.5. Flue Thermistor Replacement 47
5.6. Ignition Electrode Replacement 47
5.7. Nozzle Replacement 47
5.8. FLOW & RETURN TEMPERATURE SENSOR Replacement 48
5.9. Main PCB Replacement 48
5.10. 3-Way Inner Kit Replacement - TOP 48
5.11. Pump Head Replacement 48
5.12. Outlet Manifold Replacement 49
5.13. Water Pressure Sensor Replacement 49
5.14. 3 Bar Safety Valve Replacement 49
5.15. DHW Flow Sensor Replacement (for combi boilers only) 49
5.16. DHW Plate Heat Exchanger Replacement (for combi boilers only) 49
5.17. Electrode Positioning For 20, 24, 28, 33 kW & Single Elektrode 50
6. GLOWA TROUBLESHOOTING 51

1. INTRODUCTION

1.1. Boiler Description

The Glowa combination boiler is a high-performance wall mounted energy efficient unit providing heat for wet central heating systems.

The latest Pnömatik Combustion System and Full Premix feature detects the gas quality instantaneously and keeps the combustion quality constant. It provides up to (*) 97,5% net efficiency and excellent energy savings. (*) Please see ErP Data Table.

DANGER

This safety warning indicates that severe and life-threatening personal injury will occur.

WARNING

This safety warning indicates that severe and life-threatening personal injury may occur.

ATTENTION

This safety warning indicates that moderate personal injury may occur.

RISK OF ELECTRIC SHOCK

This safety warning indicates "DANGER Risk of Electric Shock".

CAUTION

This icon indicates that damage could occur to products and materials.

INFORMATION

This image indicates information you should read and adhere to for the correct installation of our appliances.

Abbreviations:

PRV	Pressure Relief Valve
NG	Natural Gas
LPG	Liquid Propane Gas
kW	Kilowatts
CH	Central Heating
DHW	Domestic Hot Water
LHS	Left Hand Side
RHS	Right Hand Side
Mbar	Millibar
ECV	Emergency Control Valve
LCD	Liquid Crystal Display
FGA	Flue Gas Analyser
LDF	Leak Detection Fluid

1.2. Safety Instructions:

ATTENTION

Please read these instructions fully before installing the appliance:

- These instructions are specific to the model illustrated on the front cover and detailed in the technical data section of this manual and must not be used for any other Warmhaus models.
- This appliance must only be installed by a competent Gas Safe registered engineer and if in Ireland an RGI (Registered Gas Installer) and failure to adhere to this could lead to prosecution.
- These installation instructions only apply to GB and IE and must be adhered to with the exception of all statutory regulations.
- These appliances are CE certified for safety and performance and therefore must in no way be altered or have any device or controls fitted unless it is approved in this document or in writing from Warmhaus.
- The intended use for this appliance is to heat water and supply DHW in domestic premises.
- Always refer to the appliance data badge for correct specifications and ensure the boiler is operating within the safety settings outlined by Warmhaus.
- Do not modify our flue system, and always use only the Warmhaus approved flue with this appliance.
- Ensure Warmhaus original flue components including seals and gaskets are used for the installation of this appliance.
- The installation of the appliance and controls must be done in accordance to the current Gas Safety (Installation and Use) Regulations.

If you smell gas:

- Do not create flames or sparks, do not operate electric switches or unplug any appliances.
- Do not use telephones or operate any doorbells.
- Turn off the gas supply at the gas meter or an appropriate emergency control valve.
- Open doors and windows in the property and advise any neighboor properties to adhere to 1,2 and 4.
- Call the National Gas Emergency Service – 0800111999, or in Ireland 1850 20 50 50.
- Prevent people from entering the property.
- For LPG contact the number for the supplier given on the side of the gas tank.

If you see any damage to the boiler flue or have a carbon monoxide detector and the warning noise sounds:

- Turn off the appliance.
- Open doors and windows.
- Leave the property and prevent anybody entering.
- Contact either your installer or the Emergency Gas Supplier – 080011199, or in Ireland 1850 20 50 50.
- Do not use until the issue is identified and the appropriate rectifications have been carried out.

Electrical work must be carried out by a qualified electrician and in accordance to all I.E.E and current statutory regulations.

When maintaining a Warmhaus boiler you must only use original and approved Warmhaus spare parts.

ATTENTION

- Do not store any combustible materials within the immediate vicinity of the appliance or any corrosive chemicals that can damage the appliance.
- Always follow the current Health & Safety guidance and advice for manual handling when lifting the appliance.
- When lifting the appliance always use the appropriate PPE as per the current guidance in your or industry standard Health & Safety policy.
- Dispose of all the appliance packaging as per your local waste disposal guidance and obligations.
- This appliance contains NO asbestos or any material that have contravened the COSHH regulations.
- Take care when handling any sharp edges on the boiler and safety gloves must be worn.
- Warmhaus boilers are equipped with a diagnostic capability by means of displaying error codes if the boiler fails to operate correctly, if your boiler displays an error code please refer to your user manual and arrange professional assistance where advised.
- Before operating your Warmhaus boiler please read the instructions supplied with the boiler.
- For installation of this appliance in Ireland the following regulations must always be followed:
- ECTI - National rules for electrical installations
- Irish Standard IS 10101:2020.
- IS813-2017 - Domestic Gas Installations

Where no specific instructions are given in this technical manual reference should be made to the relevant British Standard codes of practice:

BS7074:1

Code of practice for domestic and hot water supply

BS6891

Installation of low-pressure gas pipe work up to 28 mm (R1)

BS5546

Installation of gas hot water supplies for domestic purposes

EN12828

Central heating for domestic premises

BS5440:1

Flues and ventilation for gas appliances of rated heating not exceeding 70 kW (net): Flues

BS5440:2

Flues and ventilation for gas appliances of rated heating not exceeding 70 kW (net): Air Supply

BS7593

Treatment of water in domestic hot water central heating systems

BS6798

Installation of gas fired boilers of rated input up to 70 kW (net)

BS7671

IET Wiring Regulations

CE 1015

WARMHAUS A.Ş. reserves the right to make all kinds of technical and commercial amendments without giving information and rejects all responsibilities depending on misspelling.

1.3. Technical Specification

TECHNICAL DATA	UNIT	GLOWA 2025C 25kW				GLOWA 2530C 30kW				GLOWA 3035C 35kW				GLOWA 3540C 40kW			
Gas Circuit/Type		G20	G25	G30	G31	G20	G25	G30	G31	G20	G25	G30	G31	G20	G25	G30	G31
Gas Supply Pressure	mbar	20	25	30	37	20	25	30	37	20	25	30	37	20	25	30	37
Gas Consumption at Maximum	m^3/h	2,12	2,58	0,71	0,81	2,38	2,85	0,728	0,92	3,05	3,47	0,857	1,18	3,402	4,127	0,992	1,302
Gas Consumption at Minimum	m^3/h	0,56	0,62	0,33	0,34	0,77	0,83	0,507	0,505	0,797	0,856	0,509	0,544	0,834	0,924	0,533	0,568
Premix System Operating Method		Pneumatic				Pneumatic				Pneumatic				Pneumatic			
Modulation Range		1:4				1:5				1:5				1:5			
Primary / Combustion Heat Exchanger Material		Stainless Steel				Stainless Steel				Stainless Steel				Stainless Steel			
Efficiency																	
Efficiency at Maximum Heat Output (80/60 °C)	%	98,03	97,84	97,48	97,76	98,03	97,84	97,48	97,76	97,88	98,15	97,57	98,59	98,00	98,23	97,61	98,04
Efficiency at Maximum Heat Output (50/30 °C)	%	105,11	105,34	101,95	103,63	105,11	105,34	101,95	103,63	105,00	104,26	102,89	104,67	105,4	105,53	103,06	105,43
Efficiency at 30% load at (36/30 °C)	%	108,29	108,38	104,28	108,29	108,29	108,38	104,28	108,29	107,54	107,83	105,37	107,36	107,2	107,06	104,62	106,98
Seasonal Space Heating Energy Efficiency (ηs) (Class)	%	92 (Class A)				92 (Class A)				92 (Class A)				92 (Class A)			
Useful Efficiency at 30% of Rated Heat Output And Low Temperature Regime (1) (η1)	%	97,5	97,5	97,7	97,7	97,5	97,5	97,7	97,7	96,8	96,8	96,9	96,9	96,9	96,9	96,6	96,6
Useful Efficiency at Rated Heat Output And High Temperature Regime (2) (η4)	%	87,6	87,6	87,7	87,7	87,6	87,6	87,7	87,7	88,0	88,0	88,6	88,6	88,2	88,2	88,0	88,0
Radiator Circuit																	
Maximum Heat Input (Qn)	kW	24,25	24,25	24,25	24,25	24,25	24,25	24,25	24,25	28,7	28,7	28,7	28,7	33,7	33,7	33,7	33,7
Minimum Heat Input (Qn)	kW	6	6	6	6	6	6	6	6	7,5	7,5	7,5	7,5	8,35	8,35	8,35	8,35
Maximum Heat Output Pn (80/60 °C)	kW	23,7	23,7	23,7	23,7	23,7	23,7	23,7	23,7	28	28	28	28	33	33	32,8	33
Minimum Heat Output Pn (80/60 °C)	kW	5,8	5,8	5,8	5,8	5,8	5,8	5,8	5,8	7,5	7,5	7,25	7,45	8,1	8,1	8,1	8,1
Maximum Heat Output Pn (50/30 °C)	kW	25	25	24,7	25	25	25	24,7	25	30	30	29,5	30	35,5	35,5	34,7	35,5
Minimum Heat Output Pn (50/30 °C)	kW	6,2	6,2	6,2	6,2	6,2	6,2	6,2	6,2	7,9	7,9	7,74	7,59	8,6	8,6	8,6	8,6
Temperature Selection Range (min/max) high temperature	°C	25:80				25:80				25:80				25:80			
Temperature Selection Range (min/max) low temperature	°C	25:47				25:47				25:47				25:47			
Operating Pressure (Maximum)	bar	3				3				3				3			
Operating Pressure (Minimum)	bar	0,5				0,5				0,5				0,5			
Expansion Vessel Volume	bar	8				8				10				10			
Pump Pressure (at 500 l/h - 1000 l/h flow rate)	m H2O	7,5/6,0				7,5/6,0				7,5/6,0				7,5/6,0			
Max. Pump Flow Rate	l/h	2350-2400				2350-2400				2350-2400				2350-2400			
Pump Energy Efficiency Index (EEI)	EEI	≤0,20				≤0,20				≤0,20				≤0,20			
Domestic Hot Water Circuit																	
Maximum DHW Heat Input	kW	25				31,15				35				38,8			
Minimum DHW Heat Input	kW	5,5				5,8				7,5				8,1			
Max. Domestic Hot Water Flow Rate (ΔT: 35°C)	l/min	10,2				12,76				14,33				15,89			
Max. Domestic Hot Water Flow Rate (ΔT: 30°C)	l/min	12				14, 89				16,80				19,00			
Max. Domestic Hot Water Flow Rate (ΔT: 25°C)	l/min	14, 3				17, 86				20,07				22,25			
Min. Domestic Hot Water Flow Rate (for the DHW function activation)	l/min	1,5				1,5				1,5				1,5			
Maximum Water Pressure	bar	10				10				10				10			
Minimum Water Pressure	bar	0,5				0,5				0,5				0,5			
Temperature Adjustment Range (Max / Min)	°C	35-60				35-60				35-60				35-60			
Electricity Circuit																	
Electricity Supply (Frequency: 50Hz)	V AC	230 V +%10; - %15				230 V +%10; - %15				230 V +%10; - %15				230 V +%10; - %15			
Electricity Consumption (Max / Min)	Watt	86/57				98/87				106/87				115/90			
Protection Index	IP	IPX5D				IPX5D				IPX5D				IPX5D			
Exhaust Gas Circuit																	
Exhaust Gas Temperature (Min / Max) (80/60°C)	°C	55/78	55/78	54/78	54/78	69,3/70,5	64,6/70,2	57,1/70,0	59,9/69,7	60,8/66,1	55,1/64,6	56,6/67,2	57,6/65,0	56,8/62,3	56,9/62,2	54,4/66,7	58,2/67,4
Exhaust Gas Temperature (Min / Max) (50/30°C)	°C	37/57	37/57	41/55	41/55	48,5/50,5	47,7/49,5	42,8/57,0	47,0/50,5	44,5/44,5	44,0/44,1	42,2/49,8	43,4/44,9	46,8/44,2	46,7/44,50	40,6/48,4	48,7/48,9
Maximum Exhaust Gas Temperature (Maximum DHW Mode)	°C	78				70				70				70			
NOx	Class	6				6				6				6			
Weighted Value of NOx (GCV)	mg/kWh	33	33	38	38	20	19	42	31	41	31	43	49	34	32	43	53
Flue Mass Flow Rate (Nominal/Minimum) (80/60°C-Qn)	g/s	10,32/1,6	10,78/1,62	10,58/1,26	9,91/1,18	10,32/1,6	10,78/1,62	10,58/1,26	9,91/1,18	13,23/1,72	13,13/1,73	12,29/1,56	12,71/1,62	14,76/1,88	15,54/1,97	14,28/1,97	14,03/1,81
Flue Mass Flow Rate (Maximum DHW Mode) (80/60°C-Qn)	g/s	11,88	11,92	11,28	10,56	14,01	14,04	13,58	12,71	15,53	15,82	14,91	14,56	18,36	18,54	17,00	16,65
Fan Head Loss	Pa	35-140				35-140				35-140				35-140			
General																	
Dimensions (Height x Width x Depth)	mm	725 x 420 x 288				725 x 420 x 288				725 x 420 x 288				725 x 420 x 288			
Sound Level	dB (A)	52				52				54				50			
Hydraulic Group Material		Brass / Composite (Only Glowa Smart)				Brass / Composite (Only Glowa Smart)				Brass / Composite (Only Glowa Smart)				Brass / Composite (Only Glowa Smart)			
Net / Packed Device Weight	kg	32,5 / 34,7				32,5 / 34,7				33,7 / 35,9				34,5 / 36,7			
Type		B23, B23P, B33, B33P, B53, B53P, C13, C33, C43, C53, C63, C83, C93 and C(10)3															
Category		I2H, I2E, I2E(S) - (G20=20 mbar), I2E+, I2L, I2ELL - (G25=25 mbar), I3P - (G31=37 mbar), II2ELL3B/P, II2H3B/P - (G30=30 mbar)															

1.4. Product Identification

GLOWA 2025C - GC 47-786-16
GLOWA 2530C - GC 47-786-17
GLOWA 3035C - GC 47-786-18
GLOWA 3540C - GC 47-786-19

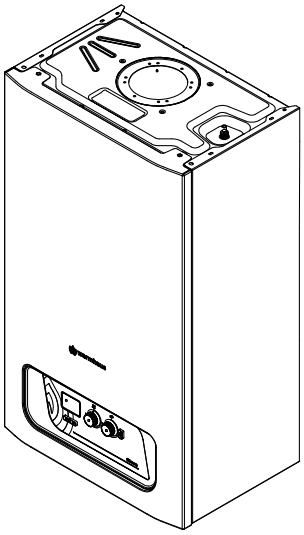

0020_00.W170505

Figure 1.1. Glowa

1.5. Regulations

- Current Gas Safety (Installation and Use) Regulations
- Building Regulations
- IET Regulations
- Local Water By-laws

It is a legal requirement in Ireland that all gas appliances must be installed by a competent registered gas engineer, such as Gas Safe and installed in accordance with all current Gas Safety Regulations.

Failure to install this appliance correctly and safely could lead to prosecution.

This appliance must be installed in accordance with and comply fully to the current Gas Safety Regulations, IET Regulations, Building Regulations and local water By-laws.

Building Regulations Part L1A2013 – (new build dwellings)

If the installation of our boiler is in a new build property or in an existing property and it is a first-time installation then the heating system must fully conform to all current building regulations Part L1A.

This can be an exception for a single-story open plan dwelling where the living area is more than 70% of the useable floor area, in this case this zone can be controlled and treated as a single zone.

Individual TRVs can be used on the system also.

For dwellings with a floor area over 150 m², a separate time and temperature control for each individual zone is required.

TRVs should also be installed in a minimum of sleeping areas and as best practice on all radiators with the exception of the room or area where the room thermostat is installed.

Building Regulations Part L1B 2010 – existing dwellings

Where an appliance replacement is to be installed onto an existing heating system it is not mandatory to zone for an example the ground floor and 1st floor. To ensure compliance it is sufficient to install an external control configuration that complies to the current Boiler Plus e.g. Smart stat, Boiler Plus compliant room/programmable room stat.

TRVs should also be installed in a minimum of sleeping areas and as best practice on all radiators with the exception of the room or area where the room thermostat is installed.

2. PRE-INSTALLATION

2.1. Packing Contents

The Warmhaus Boiler is supplied in a box which contains the materials listed below:

I. **Installation Scheme (Figure 2.1)**
II. **User's Guide (Figure 2.2)**
IV. **Hanger Plate (Figure 2.3)**
V. **Mounting Pipe Kit (Figure 2.4)**
VI. **External Control Relay (Figure 2.5)**

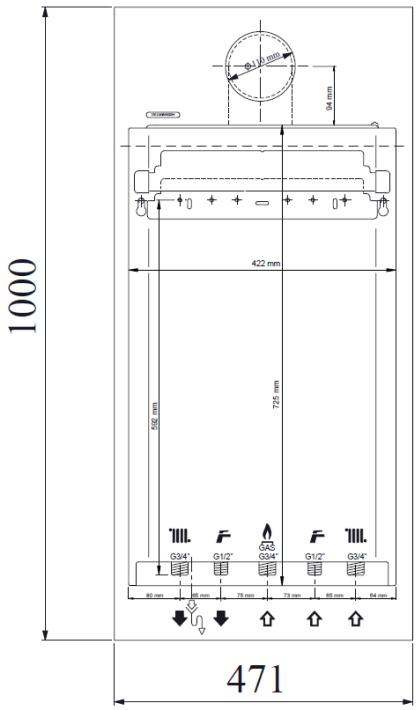

Figure 2.1. Installation scheme



Figure 2.2. Combi Installation & Service Manual



Figure 2.3. Hanger plate



Figure 2.4. Mounting Pipe Kit

Do not leave packing materials (plastic, nylon, bags, etc.) at places to be reached by children for preventing any dangers for suffocation.

2.2. Appliance Overview

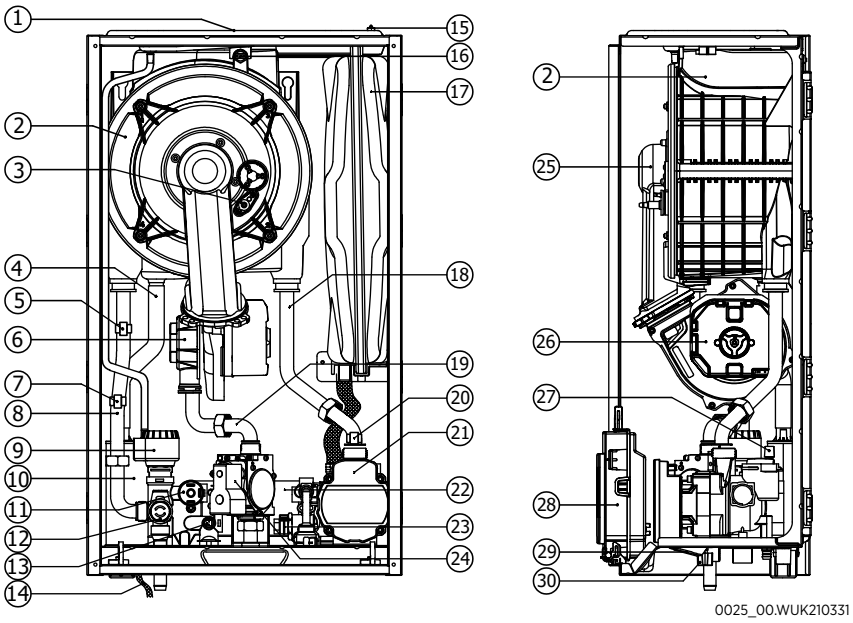

Figure 2.5. Components of combi boiler Glowa 20/24/28/33 kW)

1- Flue Outlet
2- Main Heat Exchanger
3- İgnition Electrode
4- Condensation water Discharge Hose
5- CH NTC Sensor
6- Air gas Mixing Unit (AGM)
7- Limit Thermostat
8- Radiator Outlet (Flow) Pipe
9- Three Way Motorized Valve
10- Condensation Water Trap (Siphon)
11- Low Pressure switch
12- 3 Bar safety Valve
13- DHW NTC Sensor
14- Condensation water Discharge Hose
15- Expansion Tank Air Valve
16- Flue Gas NTC Sensor
17- Expansion Valve
18- Radiator Inlet (Return) Pipe
19- Gas Inlet Pipe
20- CH Return NTC Sensor
21- Pump
22- DHW Plate Heat Exchanger
23- Tap Water Flow Sensor
24- Gas valve
25- Heat Exchanger Door
26- Electronic Fan
27- Automatic air relief Valve
28- Control Panel
29- Manometer
30- Filling Tap

2.3. Location of Boiler / Clearance

CAUTION

The boiler must be installed on a flat fixed surface which is suitable to support the weight of the boiler and any ancillaries that maybe required for the Installation. Service and maintenance should also be considered when choosing the location of the boiler unit. The boiler must not be installed outside. Please follow the below installation points.

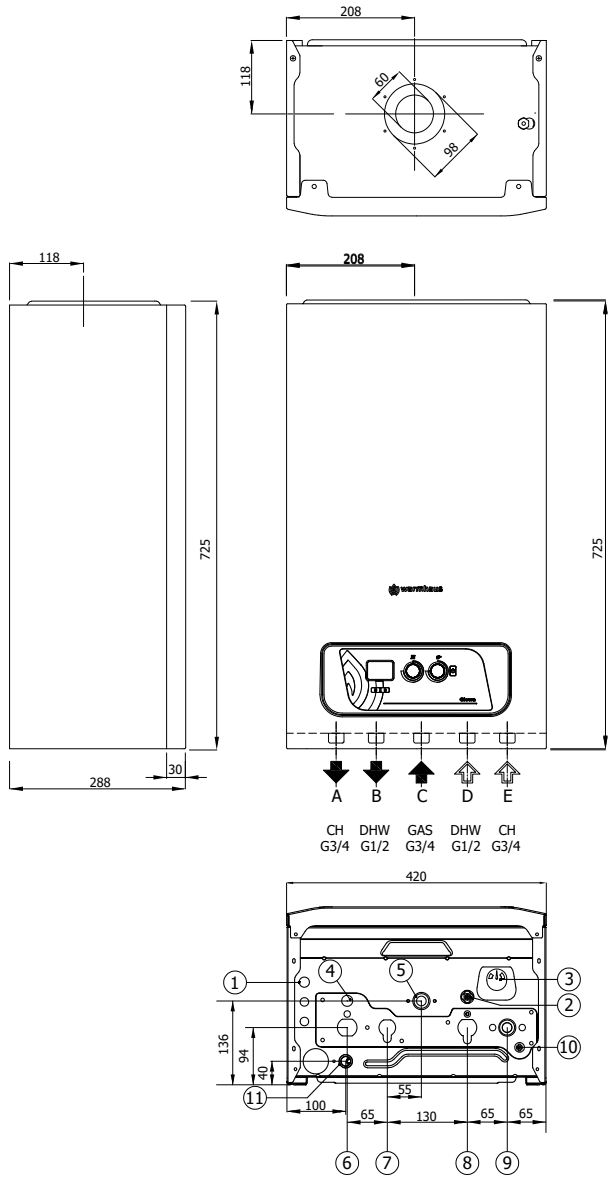

Figure 2.7. Glowa Dimensions & Connections

- **Frost protection:** Our boiler has a built in frost protection for the system water contained within the boiler only, so provisions need to be installed to protect the system pipe work in unheated areas.
- **Accessible:** The boiler must be installed in a well lit location that is suitable for engineers to carry out maintenance on the appliance and for the customer to safely adjust any controls on the boiler. All roof space installations should comply to BS5410 part 1 – roof space installations.
- **Storage:** Do not store any flammable materials around the location of the boiler or chemicals of any kind.

Installations in rooms containing baths or showers

Warmhaus Glowa Combi Boiler has an IPX5D rating

Any switch or appliance external controls using mains electricity should not be in reach of any person using a bath or shower.

All installations must be in accordance with all the current regulations and latest amendments of the IET wiring regulations **(BS7671) or in Ireland Irish Standard IS 10101:2020**

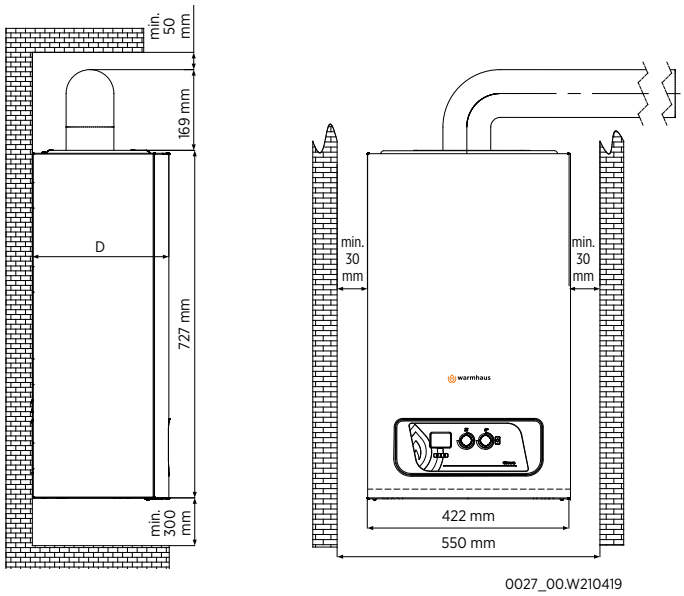

Clearances:

Above	: 219 mm	Below	: 300 mm
Left	: 30 mm	Right	: 30 mm

Figure 2.9. Boiler Services & Clearances

2.4. System Requirements

INFORMATION

The installation of this appliance must take into consideration all prevailing regulations and codes of practice and the data in this manual.

This instruction manual and the below standards must be adhered to throughout the installation

Building Regulations.
British Standards.
Irish Standards
Gas Safety Regulations.
Water Supply Regulations,

2.4.1. General

INFORMATION

The system must be to a minimum standard that meets all relevant criteria and regulations at the time of the installation of this appliance.

All external components must be able to withstand a working pressure of 3 bar and a working flow temperature of 100 °C.

The system must be free of any leaks and in a suitable working condition for the connection of a new appliance.

2.5. Water SUPPLY (only for Combi Boiler)

INFORMATION

Appliance use in hard water areas:

In normal operating conditions there is no need to provide any water treatment to prevent any limescale formation this is because the maximum temperature of the DHW heat exchanger is monitored and limited by electronic control.

In areas where the water exceeds 200 ppm it is advised that a scale prevention should be installed, and you should contact your local water authority for advice and guidance.

Installations that have non-return or backflow valves fitted on the cold mains should have a mini expansion vessel fitted between the valve and the appliance.

2.6. Gas Supply

INFORMATION

The gas installation should be in accordance with the relevant standards. In GB this is BS 6891 (NG). In IE this is the current edition of IS 813 Domestic Gas Installations.

The boiler must be installed on a supply from a governed gas meter.

The connection to the appliance is a 22mm copper tail located at the rear of the gas service cock.

Ensure that the pipework from the meter to the appliance is of adequate size, and the demands of any other gas appliances in the property are taken into consideration. Do not use pipes of a smaller diameter than the boiler gas connection (22mm) UNLESS the stated gas rate can be achieved with pipe of lesser diameter and with all other gas appliances operating at maximum rate.

Purging of any pipe work and the appliance must be carried out as outlined in BS 6891.

2.6.1. By-pass

INFORMATION

The boiler incorporates a bypass by utilizing the primary circuit on the DHW plate heat exchanger and uses this method as an integral bypass system and therefore does not require as standard an external bypass fitted to the system.

2.6.2. Ventilation

INFORMATION

The boiler does not require any additional ventilation and when installed in a cupboard or compartment the boiler operates at an adequate temperature without the requirement for additional ventilation. BS 5440: Part 2 refers to this in detail.

2.6.3. Primary system cleaning

Debris in the existing heating system can cause damage to the boiler unit and cause efficiency issues and even void the appliance warranty if the correct cleaning has not been carried out.

2.7. Electric Supply

RISK OF ELECTRIC SHOCK

This appliance must be earthed.

This appliance must not be connected to a three-phase supply.

External wiring must be correctly earthed, polarised and in accordance with relevant regulations/rules. In GB this is the current IEE Wiring Regulations., in IE this is Irish Standard IS 10101:2020

The mains supply is 230V ~ 50Hz fused at 3A.

Important:

The method of connection to the electricity supply must facilitate complete electrical isolation of the appliance.

Connection may be via a fused double-pole isolator with a contact separation of at least 3mm in all poles and servicing the boiler and system controls only, alternatively the connection can be made via a fused 3 pin plug to an un-switched shuttered socket both complying to BS1363

When working on the boiler the electricity must always be isolated and the correct method of safe isolation must always be followed.

Any external controls connected to the boiler must have at minimum and valid CE approval and be suitable for connection to the boiler.

Please ensure the correct RCD is fitted the circuit where the boiler is connected electrically, due to the low energy DC modulating pump fitted inside the boiler.

If you plan to replace the cable supplied with the boiler for the electrical connection, please ensure the replacement cable meets the current standard and it is the correct size and has the correct heat rating.

2.8. PRV Discharge

ATTENTION

The safety discharge pipe must be installed with a minimum pipe size diameter of 15mm and be in copper or an other suitable material that can withstand PRV discharge temperatures and pressures that comply with BS 5254 or BS EN 1451.

The PRV discharge terminal must terminate away from any electrical hazards and terminate where it cannot cause injury to person, it should terminate with a bend to face the external surface or into a suitable drain point.

The PRV discharge can be installed into a waste pipe system and all installations should follow the guidance of BS 6798 sections 6.

Due to maintenance of the PRV we require our copper connection pipe to be connected to the external PRV pipe work by means of a compression joint so that in all installations maintenance will be achievable without the need to cut and re-join copper pipe work.

Where PRV terminations are not possible to visually see e.g. directly into a waste pipe connection, then a tundish must be fitted so that and water drips leaking from the PRV can be visually seen and the appropriate action taken.

Care should also be taken when planning the termination of the PRV due to the possibility of a slow and steady drip can discharge from the terminal and if not correctly sited leave the possibility of water freezing when hitting ground causing an extreme hazard if the frozen water is in the path of a walk way.BOILER FLUE CONNECTIONS

2.9. Exhaust Gas Flue Pipe Set and Accessories Connection

Flue accessory sets to be used in exhaust gas installation of hermetic boiler should be original Warmhaus flue sets and they should be used by considering measurements and restrictions given in installation instructions.

In case of using exhaust gas pipe and/or accessories other than Warmhaus original exhaust gas flue pipes and accessories, boiler shall not be commissioned by the Authorised Service and thus, no warranty is given!

Warmhaus provides different solutions for placing exhaust gas discharge and air suction pipes in addition to the boiler and boiler shall not be operated without them.

Boiler should only be installed with original Warmhaus air suction and exhaust gas discharge device made of plastic material. Plastic channels cannot be installed without suitable protection against UV and weather conditions to distances over 40 cm and exteriors.

Flue should be installed in accordance with national and local directives.

2.9.1. Installation with Horizontal Flue Sets

Connecting Horizontal Concentric Flue Set to the boiler (original diameter DN 60/100 mm)

Since your boiler is hermetic model, it takes the used air from exterior and discharges exhaust gases created as the result of burning through the same flue group. In order to prevent emission of excessively harmful exhaust gases, flue usage and installation is very important, therefore warnings should be taken into consideration when flue connections are being performed.

- Make required flue selection for the flue connection to be made external and installation place of the boiler. If the standard flue set is not adequate, please select most suitable elements from our list of connection accessories considering warnings given in our user's guide.
- Fix the flange under the Bend piece (1) by using the Flange Bolt (10) via Flange Connection Screws (11) to holes on the boiler.
- 2 impermeability bolts within the hermetic flue set (2) are placed into internal pipe slots at both ends of the 90° Bend.
- Place the exterior wall (EPDM) bolt into the flue terminal as seen in Figure 31 for grouping the flue output terminal. After placing the flue output terminal through exterior of wall and the previously opened hole, fix the Interior Wall Connection Bolt (7) into the flue terminal.

COMBI BOILER FLUE CONNECTION TYPES

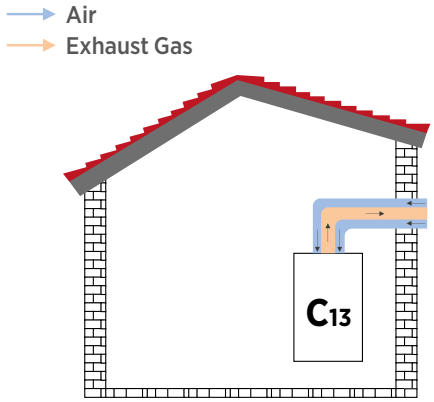

Discharge with homocentric flue connection

Figure 2.8. Hermetic (Concentric) and Flue (Split-Flue type

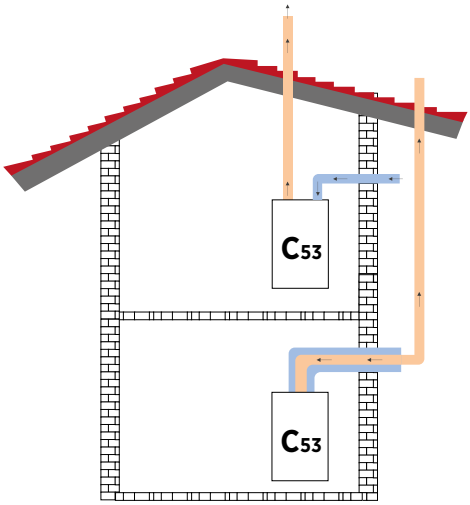

Exhaust gas discharge and fresh air intake with concentric flue kit and split flue kits

For room sealed appliances of the type C5 boilers

Attention: The terminals for the supply of combustion air and for the evacuation of combustion products shall not be installed on opposite walls of the building.

Figure 2.9. Hermetic concentric and vertical split flue connection.

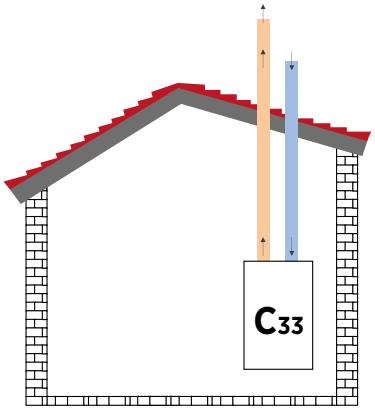

Exhaust Gas Discharge Fresh Air Intake with Split Flue Sets

The terminal outlets from separate combustion and air supply circuits shall fit inside a square of 50 cm and that the distance between the planes of the two orifices shall be less than 50 cm.

Figure 2.10. Vertical Type Hermetic Use with Split Flue Set

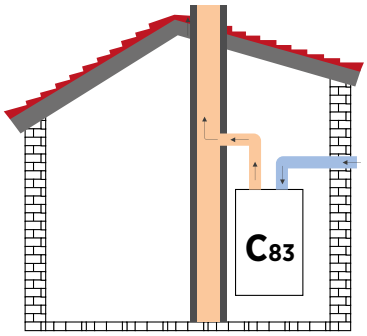

Discharge to building chimney and fresh air intake with split flue connection

For room sealed appliances of the type C8 boilers

a) overheat combustion products temperature; < 105 C°

b) G20 : CO_2-content; 9.00 % (tolerance +%0,5 / -0,5%); G30 / G31: CO_2-content; 10.00 % (tolerance +%0,5 / -0,5 %)

c) characteristics of the chimney to which the boiler may be connected, according to fig 13.

d) condensate flow into the appliance is not allowed.

Figure 2.11. Hermetic vertical split flue connection.

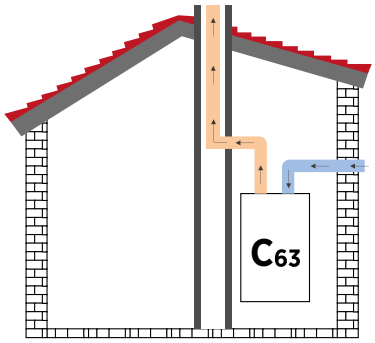

Exhaust gas discharge through the building chimney and fresh intake from outside with split flue sets

For room sealed appliances of the type C6 boilers

overheat combustion products temperature for flue; < 105 °C G20 : CO_2 content at nominal operating conditions; 9.00 % (tolerance : +%0,5 / -0,5 %) G30 / G31 : CO_2-content; 10.00 % (tolerance : +%0,5 / -0,5 %) maximum allowable draught and maximum allowable pressure difference between combustion air inlet and flue gas outlet (including wind pressures); 120 Pa. characteristics and the applications of the duct system to which the boiler can be connected; condensate flow into the appliance is not allowed. Maximum allowable temperature of combustion air; 40 C° maximum allowable recirculation rate of 10 % under wind conditions.

Attention: The terminals for the supply of combustion air and for the evacuation of combustion products shall not be installed on opposite walls of the building.

Figure 2.12. Building chimney connection with hermetic split flue

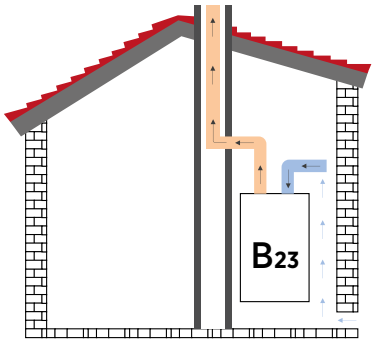

Exhaust gas discharge through the building chimney and fresh intake from outside with split flue sets

Figure 2.13. Exhaust gas discharge through the building chimney and fresh intake from the building chimney with split flue sets

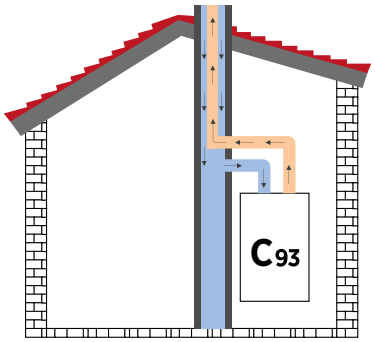

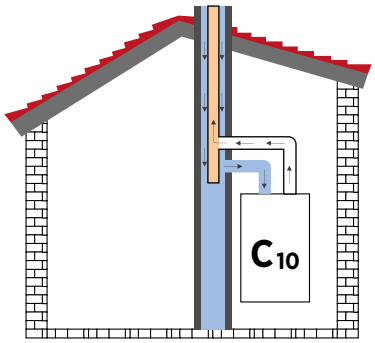

Attention: The minimum usable diameter must not be under 80 mm or equivalent for the vertical duct supplying the combustion air.

Attention:

a) nominal working combustion product temperature : > 70°C max conditions

b) overheat combustion products temperature : 105° C

c) the minimum length of the specified connecting ducts; 1 mt / maximum length of the specified connecting ducts; 10 mt

d) For size/shape of the end of the fitting please refer 2.2.14. Installation with Vertical Flue Sets page 13, Fig.26.

e) Please re adjust TsP Paramater P22 = Flues gas pipe length (value 1 = 1 meter) according to actual flue pipe

f) Valve ON the flue gas system.

g) Non-return valve function has to be checked annually by authorised service.

Information for the design of the common duct system for a type C(10) boiler

a) The boiler is designed to become connected to a common duct system that is designed to operate where the static pressure in the common flue duct might exceed the static pressure in the common air duct by 25 Pa under the condition that n-1 boilers are running at maximum nominal heat input (Qn,max) and 1 boiler at the minimum heat input allowed by the controls

b) combustion product mass flow rate at maximum nominal heat input are given technical table.

c) combustion product mass flow rate at minimum heat input allowed by the controls are given technical table.

d) G20 : CO2 or O2 content of the combustion products at nominal operating conditions 9 % (+0,5/-0,5)
G30 / G31 : CO2-content; 10.00 % (tolerance : +%0,5 / -0,5 %)

e) minimum allowable pressure difference between combustion product outlet and air inlet shall be declared as -200 Pa (including -100 Pa wind pressure).

General for connection of a type C(10) boiler to a common duct system

Characteristics and the applications of the common duct system to which the boiler can be connected, with at least the following information:

a) the flue duct system shall be CE marked and comply with EN 15502 standart 12.2.1.4.111.2;

b) nominal combustion products temperature for dimensioning the common duct system shall be declared as 25 °C;

c) the combustion product mass flow rate at maximum heat input shall be specified for every connection point; the terminal of the common duct shall be designed to induce a draft;

d) condensate flow into the boiler is allowed;

e) maximum allowable recirculation rate of 10 % under wind conditions;

f) the maximum allowable pressure difference between combustion product inlet and air outlet of the common duct system shall not be exceeded when n-1 boilers are running at maximum nominal heat input (Qn,max) and 1 boiler at the minimum heat input allowed by the controls;

g) the common flue duct shall be appropriate for an overpressure of at least 200 Pa;

h) the duct system shall not include a draft diverter.

Warning: the boiler if it is installed as a C (10) boiler and IF / when the boiler is disconnected the air outlet and the combustion product inlet openings shall be closed and checked on tightness.

Figure 2.14. Exhaust gas discharge through the building chimney and fresh intake from the building chimney with split flue sets

Flue outlets must not be subject to any blockage and must not interfere with any other flue outlet. If the output pipe passes 1000 mm nearby of a plastic or painted groove or 500 mm of painted fringes, an aluminium shield with at least 1000 mm length should be placed below the groove or fringe. Output pipe should be at least 2 m over surfaces that may be reached by individuals.

Under certain weather conditions, output pipe may emit water vapour; installation should not be performed at places where this vapour may cause discomfort.

Exhaust gases should be prevented from entering flue ventilation spaces.

Flue system of combi boiler may be installed from inside the room without requiring intervention from the external wall. For that reason, a housing should be installed in the wall for lining the internal surface of channel wherein the output pipe passes through, particularly for thick walls.

2.9.2. Peripheral Distances of Flue Output Connections

In order to position the flue set output pipe

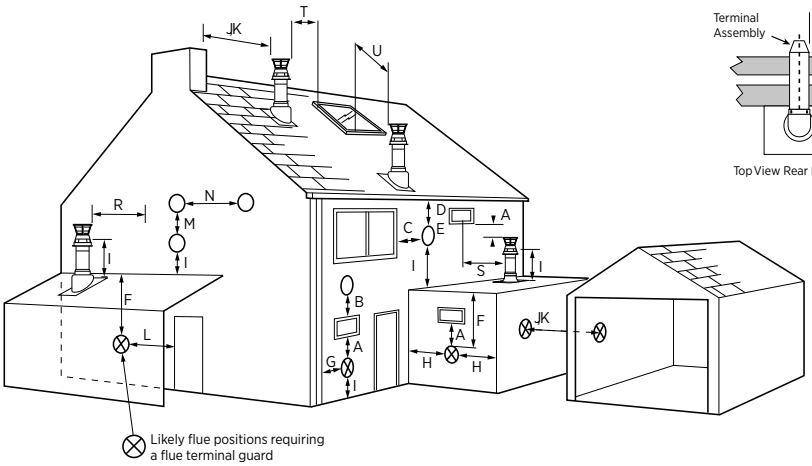

Figure 2.15. Environmental locations of flue

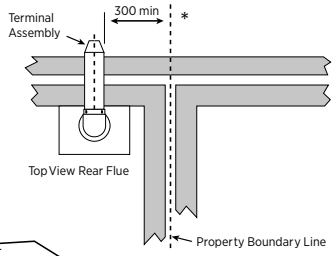

NOTE: The distance from a fanned draught appliance terminal installed parallel to a boundary may not be less than 300 mm in accordance with the diagram below

	Terminal Position with Minimum Distance	(mm)
A[1]	Directly below an opening, air brick, opening windows, etc.	300
B[1]	Above an opening, air brick, opening window etc.	300
C[1]	Horizontally to an opening, air brick, opening window etc.	300
D[2]	Below gutters, soil pipes or drain pipes.	25 (75)
E[2]	Below eaves.	25 (200)
F[2]	Below balconies or car port roof.	25 (200)
G[2]	From a vertical drain pipe or soil pipe.	25 (150)
H[2]	From an internal or external corner.	25 (300)
I	Above ground, roof or balcony level.	300
J	From a surface or boundary line facing a terminal.	600

	Terminal Position with Minimum Distance	(mm)
K	From a terminal facing a terminal (Horizontal flue). From a terminal facing a terminal (Vertical flue).	1200 600
L	From an opening in carport (e.g. door, window) into the dwelling.	1200
M	Vertically from a terminal on the same wall.	1500
N	Horizontally from a terminal on the same wall.	300
R	From adjacent wall to flue (vertical only).	300
S	From an adjacent opening window (vertical only).	1000
T	Adjacent to windows or openings on pitched and flat roofs	600
U	Below windows or openings on pitched roofs	2000

1 In addition, the terminal should be no nearer than 150 mm to an opening in the building fabric formed for the purpose of accommodating a built-in element such as a window frame.
2 Only ONE 25mm clearance is allowed per installation. If one of the dimensions D, E, F, G or H is 25mm then the remainder MUST be as shown in brackets, in accordance with B.S.5440-1.

2.9.3. Installation with Horizontal Flue Sets

Connecting Horizontal Homocentric Flue Set to the Combi Boiler, (original diameter DN 60/100 mm)

Since your combi boiler is hermetic model, it takes the used air from exterior and discharges exhaust gases created as the result of burning through the same flue group. In order to prevent emission of excessively harmful exhaust gases, flue usage and installation is very important, therefore warnings should be taken into consideration when flue connections are being performed.

- Make required flue selection for the flue connection to be made external and installation place of the combi boiler. If the standard flue set is not adequate, please select most suitable elements from our list of connection accessories considering warnings given in our user's guide.
- Fix the flange under the Bend piece (1) by using the Flange Bolt (10) via Flange Connection Screws (11) to holes on the combi boiler.
- 2 impermeability bolts within the hermetic flue set (2) are placed into internal pipe slots at both ends of the 90° Bend.
- Place the exterior wall (EPDM) bolt into the flue terminal as seen in Figure 19 for grouping the flue output terminal. After placing the flue output terminal through exterior of wall and the previously opened hole, fix the Interior Wall Connection Bolt (7) into the flue terminal.

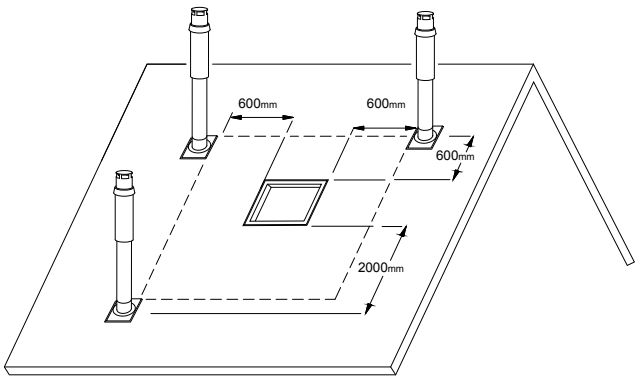

Figure 2.16. Terminals adjacent to windows or openings on pitched and flat roofs

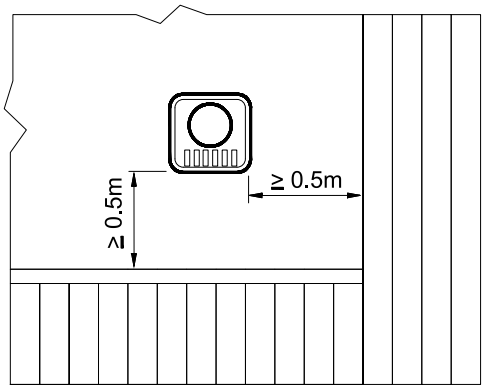

Figure 2.17. Distance of flue outlets from side and bottom of type C appliances

3. INSTALLATION

3.1. Unpacking Appliance

ATTENTION

Our appliance may require 2 people when lifting the boiler to the installation site and throughout the installation process when lifting and positioning is carried out.

Installers should be knowledgeable in safe handling techniques and pay attention and follow all Health & Safety policies put in place by their company.

Carefully unpack the boiler unit from it's box and remove the unit from the polystyrene packaging and dispose of the boiler packaging to comply with your local waste management guidance.

3.2. Appliance Position

ATTENTION

The surface where the boiler is to be mounted must be flat and rigid and be able to withstand the appliance total installation weight.

Care should be taken on the appliance position and location to ensure the correct standards are met for the following:

- Flue terminal position and access to flue joints.
- Condensate discharge.
- PRV discharge and termination.

A visual inspection should be carried out to ensure when positioning the appliance any drilling of the mounting bracket or pipe clips will damage any electric cables or pipes.

3.3. Wall Mounting Template

Please ensure you mount the template level before drilling any holes and ensure you are drilling the correct holes as per the template guidance.

The wall mounting template should be fixed to the desired position on the surface where the boiler is to be installed, after fixing the template please set the flue guide on the template to match your desired flue position. Drilling of the fixing holes for the mounting bracket can also be done as per the guidance on the wall mounting template.

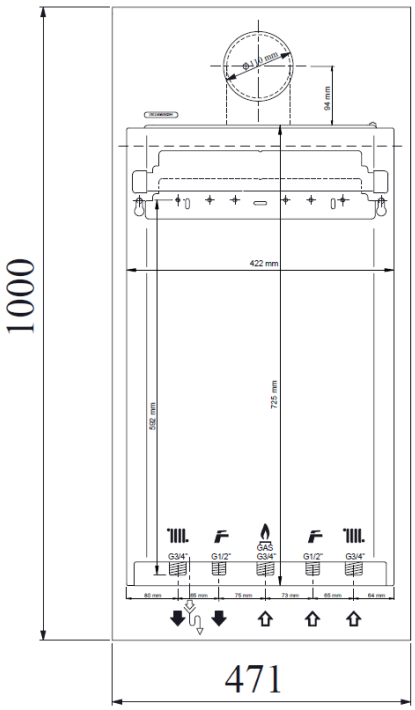

Figure 3.1. Installation Scheme

The template also displays the pipe centers and correct pipe work layout for the correct installation of the boiler pipe work.

3.4. Preparing the Wall – Drill Flue Hole

ATTENTION

When drilling the flue hole ensure that any falling masonry debris will not cause an injury to person or damage to property, please make sure both surfaces when drilled are flat and free of debris.

We recommend using a 117 mm core drill attachment to drill the flue hole, this will give you some tolerance if required when positioning the flue.

3.5. Installing Mounting Bracket

INFORMATION

We suggest when drilling the holes for the mounting brackets you drill holes that can accommodate 7.5 mm / 8 mm plastic raw plugs and that the minimum fixing screws are No 10 x 50mm and ensure when the mounting bracket is fixed it is level.

Ensure you make a minimum of 2 fixing points to be drilled to ensure correct fixing of our mounting bracket.

Please ensure the mounting bracket is fixed in the correct orientation with the two hanging points facing in an upwards direction.

3.6. Hanging The Boiler

INFORMATION

Ensure that all the plastic safety plugs are removed from the CH and DHW (for combi boilers only) inlet and outlet connections at the bottom of the boiler.

Note that the boiler may contain some residual water when the plugs are removed so care should be taken for this.

Taking all lifting techniques into consideration lift the boiler and locate it over the two fixing tabs at either side of the mounting bracket.

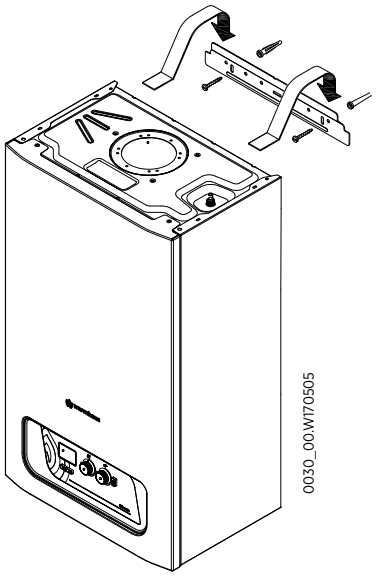

Figure 3.2. Wall Mounting Bracket Installation

Make sure the boiler is correctly located on the mounting bracket and that the boiler is level and straight.

3.7. Appliance Connections

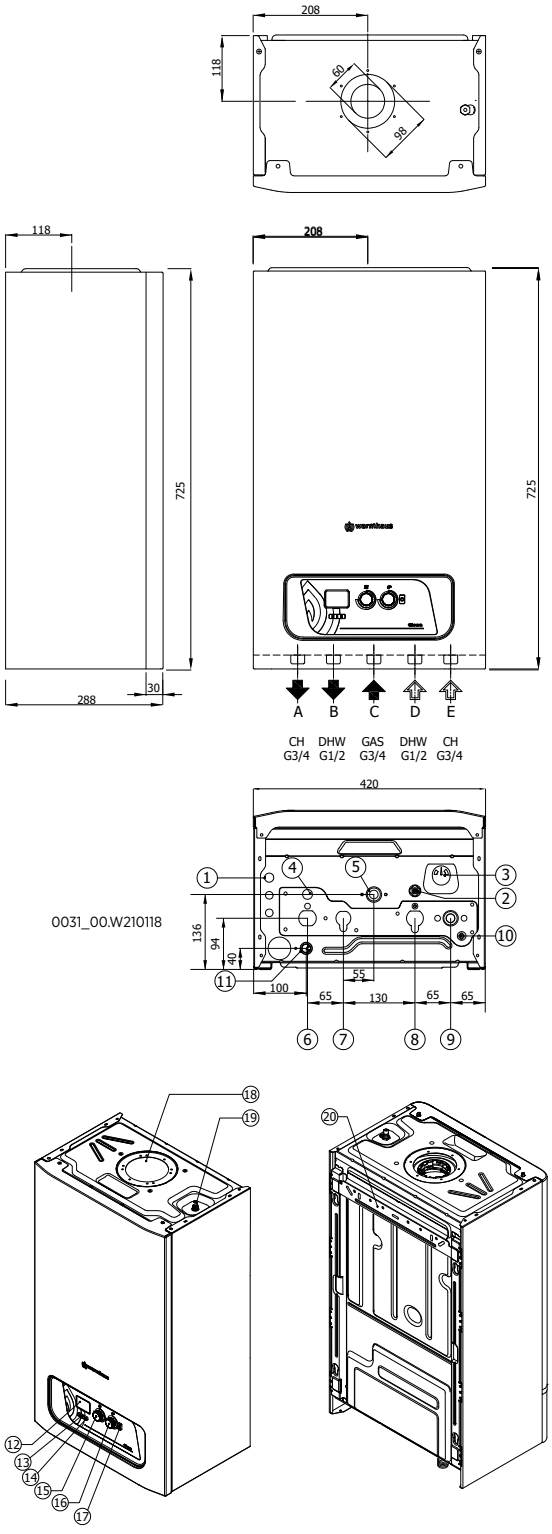

Key for figures:

1) 230V AC MAIN SUPLLY
2) FILLING VALVE
3) MANOMETER
4) PRESSURE RELIEF VALVE OUTLET
5) GAS INLET
6) CENTRAL HEATING FLOW (CH)
7) DOMESTIC HOT WATER OUTLET (DHW)
8) DOMESTIC HOT WATER INLET (DHW)
9) CENTRAL HEATING RETURN (CH)
10) DRAIN POINT
11) CONDANSATE DRAIN
12) LCD DISPLAY
13) CH/DHW MODE PUSH BUTTON
14) RESET BUTTON
15) CENTRAL HEATING (CH) KNOB
16) DOMESTIC HOT WATER (DHW) KNOB
17) ON / OFF BUTTON
18) FLUE OUTLET
19) EXPANSION VES. AIR VALVE
20) MOUNTING BRACKET

Figure 3.2. Dimensions & Connections

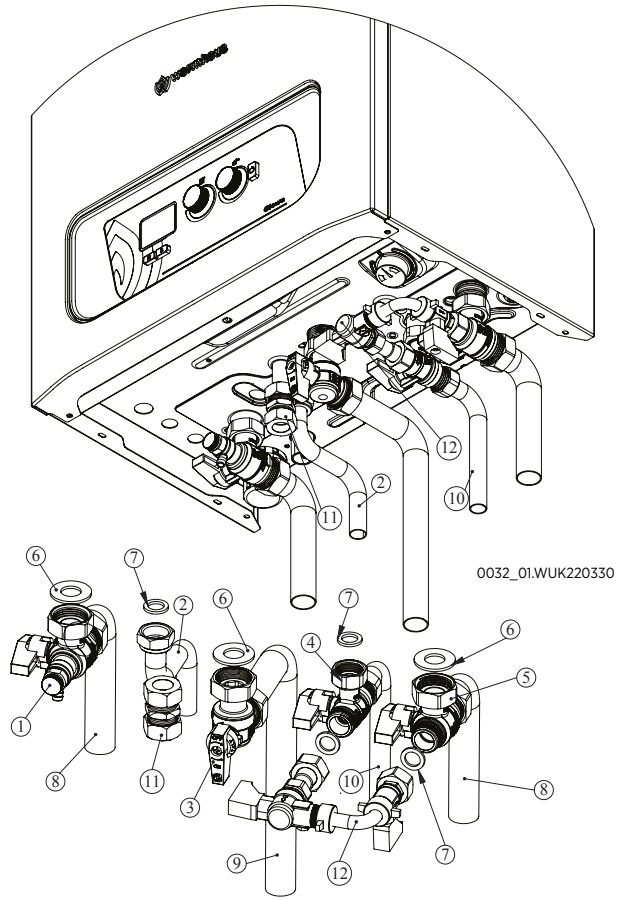

1. CH Flow Valve 1 pcs.
2. DHW Outlet Elbow 1 pcs.
3. Gas Inlet Valve (Yellow) 1 pcs.
4. DHW Inlet Valve 1 pcs.
5. CH Return Valve 1 pcs.
6. Gasket 3/4 " 3 pcs.
7. Gasket 1/2 " 4 pcs.
8. CH Flow/Return Pipe 2 pcs.
9. Gas Inlet Pipe 1 pcs.
10. DHW Inlet Pipe 1 pcs.
11. Compression Fitting
12. Filling loop

Figure 3.3. Mounting kit

The Warmhaus Glowa boiler is supplied with a hardware pack containing isolation valves and a DHW connector pipe for the installer to connect to the boiler unit.

The hardware pack supplied is:

PRV – 15 mm copper stub pipe – THIS CONNECTION SHOULD BE MADE BY A SUITABLE COMPRESSION TYPE FITTING.

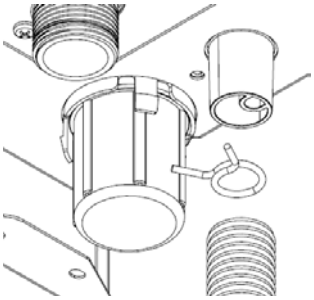

The condense connection is made with a flexible hose supplied with the boiler as per the above image

Figure 3.4. Condensate hose connection

3.8. Filling Appliance & Adding Inhibitor

Filling Loop Connection

When filling there may be a slight water leak from the air vent therefore electrical connections should be protected.

The Filling loop is included in the package.

It must be outsourced by the customer.

ATTENTION

Do not adjust the system pressure if the boiler unit is hot, we suggest that the boiler temperature is shown as below 40 degree's on the boiler display screen before adjusting the pressure.

Ensure the system has been cleaned following the guidance of BS 7593 and that all existing and installation debris is removed.

The primary heating circuit must not be filled with artificially or salt based softened water it must be filled with an untreated cold supply from the cold water main.

The filling loop must be WRAS approved and not be a permanent installation (see below image)

If there is an additional expansion vessel fitted on the circuit, please ensure the charge pressure is the same as the boiler vessel (0.75 bar).

If the filling loop is located away from the boiler then ensure a pressure gauge is located next to the filling loop to ensure correct filling pressure.

The filling loop should always be removed, and suitable caps fitted to the valves after filling the system has been carried out.

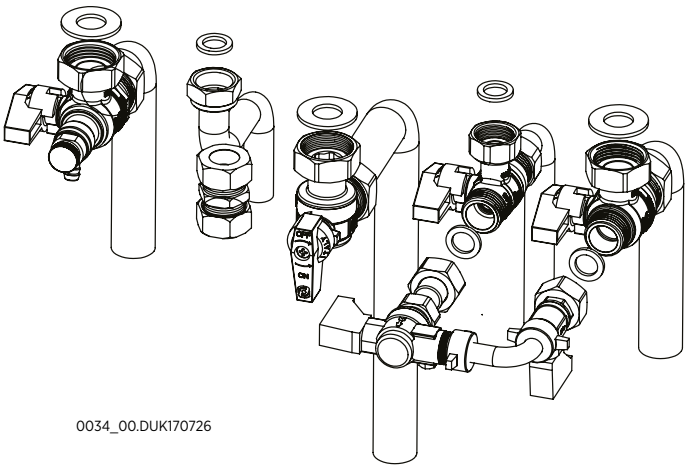

Figure 3.5. Filling-Loop Kit

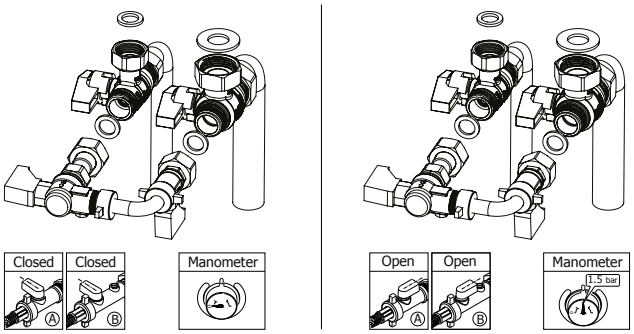

Figure 3.6. Filling-Loop Kit connection

Filling Loop Connection

1. Remove the dust cap and connect to flexible hose to the check valve securely.
2. Slowly turn both valves to the Open position until the pressure gauge reads between 1.2 and 1.5 bar.
3. Turn both valves slowly to the Close position and check the pressure in between 1.2 and 1.5 bar if pressure less than 1.2 bar then.
4. Slowly turn the both valves to the Open position until the pressure gauge reads between 1.2 and 1.5 bar.
5. Turn both valves slowly to the Close position and disconnected the flexible hose from the check valve.
6. Fit the dust cap to the open and make sure no water leakage from valves or caps.

NOTE: If loss of pressure problem persists you must contact your installer or service company.

Adding Inhibitor

CAUTION

The inhibitor used in the system with your Warmhaus boiler must not cause damage to any materials within the boiler e.g. stainless steel, copper, brass and any other composite material.

If the boiler is installed in areas such as leisure accommodation, then the inhibitor must incorporate an anti-freeze solution or the anti-freeze solution can be added separately but must be suitable for the boiler materials as above.

We advise that the PH level of the system water should be between 6 -8 and any chemicals added must not change this.

When the inhibitor is added please record this with a label (if the inhibitor manufacturer supplied this) or with a suitable method so that the installation date can be monitored for service.

Inhibitor levels should be monitored and checked on service/maintenance visits to confirm the system has the correct dosage.

Always add the specified dosage given by the inhibitor manufacturer and do not mix inhibitors by different manufacturers.

Caution should be taken when disposing of all containers from the inhibitor after installation.

If there is any doubt on the suitability of the inhibitor you wish to use then please consult Warmhaus technical before adding to the system.

3.9. Installation with Horizontal Flue Sets

Connecting Horizontal Concentric Flue Set to the System Boiler, (original diameter DN 60/100 mm)

Since your boiler is hermetic model, it takes air from exterior and discharges exhaust gases created as the result of burning through the same flue group. In order to prevent emission of excessively harmful exhaust gases, flue usage and installation is very important, therefore warnings should be taken into consideration when flue connections are being performed.

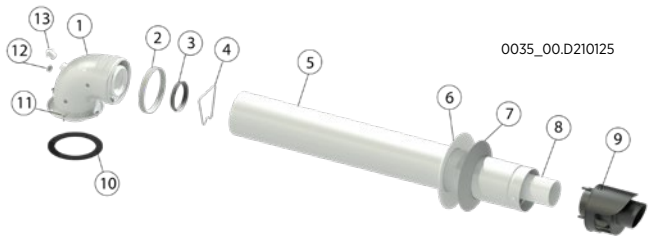

1. 90° Elbow
2. Ø100 Sealing Gasket
3. Ø60 Sealing Gasket
4. Centralizer
5. External Flue Pipe
6. Internal Wall Plate
7. External Wall Plate
8. Internal Flue Pipe
9. Grill
10. Neoprene Gasket
11. Screws
12. Inspection Cap (Fresh Air)
13. Inspection Cap (Gas)

Figure 3.7. Fixed flange connection concentric flue kit

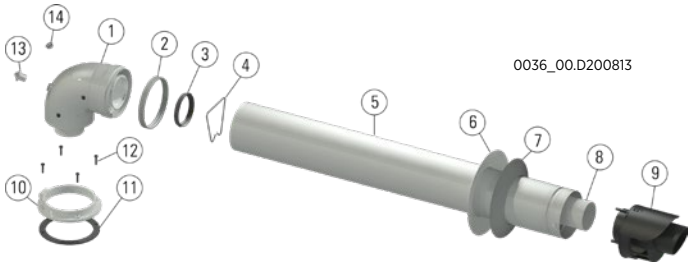

1. 90° elbow
2. Inspection Cap (Gas)
3. Inspection Cap (Fresh Air)
4. Screws
5. Flange Gasket
6. Flange Gasket Screw
7. Neoprene Gasket
8. Ø100 Sealing Gasket
9. Ø60 Sealing Gasket
10. Centralizer
11. Internal Flue Pipe
12. Internal Flue Pipe
13. Internal Wall Plate
14. External Wall Plate
15. Grill

Figure 3.8. Discrete flange connection concentric flue kit,

- Loosen the Flange Gasket Screw (6) and remove it from the elbow (1)
- Put the Neoprene Sealing Gasket (7) under the flange and secure it with 4 screws (6 and see Picture A)
- Place the flue elbow (90°) (1) press down and tighten the screw (6) to secure the flue elbow (see picture B)
- Fit the outer and inner wall flanges (13-14) on the terminal pipe (12)
- Connect flue to the boiler, positioning the seals correctly (picture C). Seal the flue into the wall with silicone or sand + cement and cover with Wall Seals provided.

3.10. Installing the Flue System

Apply a suitable lubricant to the sealing joints before connecting any flue products and ensure the horizontal flue terminal is installed level without a slope.

The flue pipe must be sealed internally and externally with the wall seals supplied.

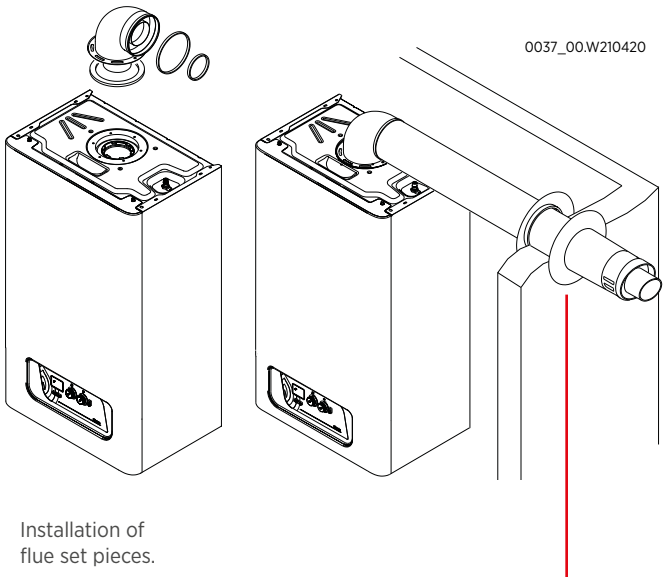

Figure 3.9. Concentric flue kit wall output.

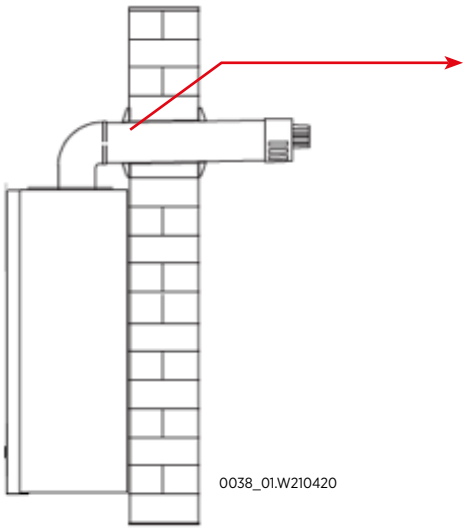

Warmhaus horizontal flue sets do not require any fall and must be installed level.

Figure 3.10. Installation of the Flue Kit without slope

During installation please ensure that all flue extensions are installed with a slope back to the boiler between 1.5 degree and 3 degrees. Also ensure the pipe is supported every 1 meter and change in direction

60/100 mm Concentric flue systems information

Only approved Warmhaus flue systems can be connected to our appliance and no other flues have been tested or approved to work with any Warmhaus appliances – see below our list of standard products:

Concealed Flue Configurations

Where our Warmhaus flue system is to be installed in concealed locations provisions must be made for inspection and service requirements.

- Minimum 300 mm square inspection hatches must be fitted.
- The inspection hatch edge must not be fitted more than 1.5 meters away from a flue joint
- Inspection hatches should be fitted at every change of direction.

Flue Data

60/100mm Concentric flue systems information

Warmhaus flue pipe technical specification:

Horizontal Termination:

- Maximum length = 10 meters including the bend or adaptor connected directly to the boiler.
- Additional horizontal flue pipes should always be installed with a 1.5° to 3° fall from the terminal to allow condensate to run back to the boiler (1.5° = 25 mm per meter).
- Effective flue length for the following:

Elbow	Equivalent To Straight Length
45 Degree	0.5 meter
90 Degree	1.0 meter

(Ø60/100 mm)

Lmax : Total Equivalent Length ≤ 10 m

Lmax : a (90° Bend) + b + c ≤ 10 m

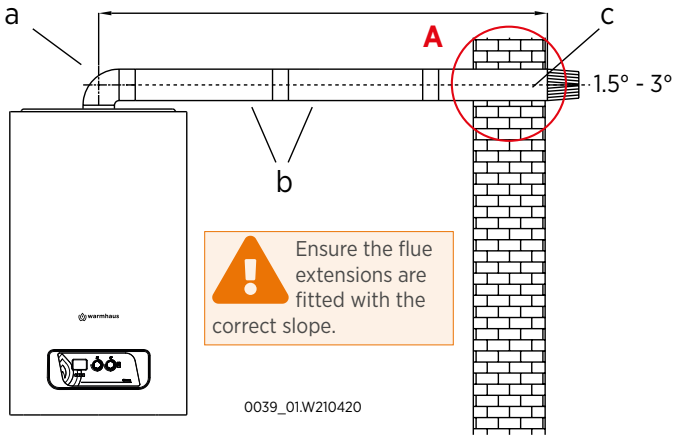

Figure 3.11. Single 90° bended sample flue installation

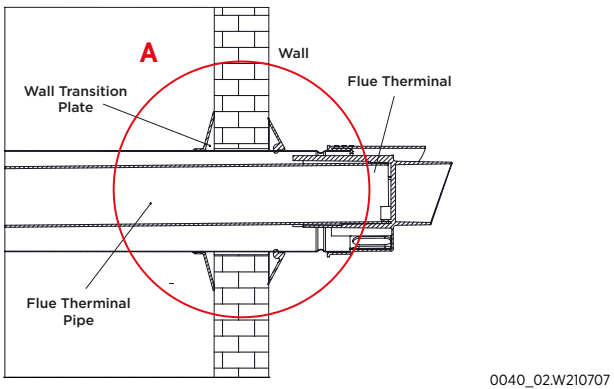

Figure 3.12. Transition detail of the horizontal flue kit through the wall

Total equivalent length ≤ 10 m

a (90° Elbow) + b + c (90° Elbow) + d ≤ 10 m

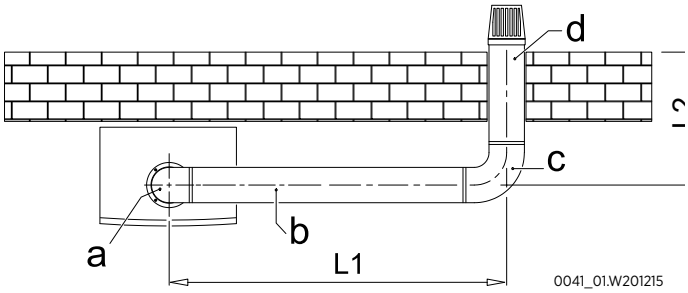

a- Standard Flue Set Elbow (90°)

b- Flue Extension Pipe

c- Additional 90° Elbow = 1 m

d- Standard Flue Set Pipe

Figure 3.13. Two 90° elbow sample flue installations

Total equivalent length ≤ 10 m

a (90° Elbow) + b + c (45° Elbow) + d + e (45° Elbow) + f ≤ 10 m

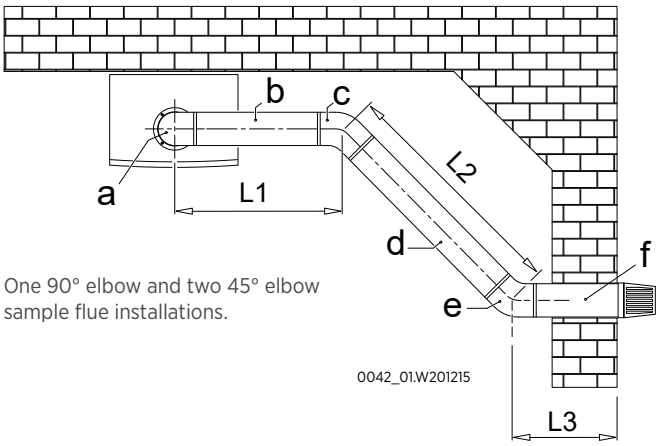

One 90° elbow and two 45° elbow sample flue installations.

Total length of hermetic flue set should not exceed 10 m with single elbow horizontally. Also, this total length reduces by 1 m with every 90° elbows or two 45° elbows. Maximum 3 pieces of 90° elbow can be used.

a- Standard Flue Set Elbow (90°)

b- Flue Extension Pipe (L1)

c- Additional 45° Elbow = 0,5 m

d- Standard Flue Set Pipe (L2)

e- Additional 45° Elbow = 0,5 m

f- Standard Flue Set Pipe (L3)

Figure 3.14. Single 90° and two 45° elbow sample flue installations

3.11. Installation with Vertical Flue Sets (Ø60/100 mm)

Your Warmhaus boiler can also be installed with a vertical flue system that can terminate on both flat and pitched roofs, vertical flue installations must not exceed 11 m in total.

Apply a suitable lubricant to the sealing joints before connecting any flue products and ensure the vertical flue terminal is installed level without a slope.

The vertical flue terminal can be fitted to both flat and pitched surfaces.

Flue Data

WARNING

Warmhaus flue pipe technical specification:

Vertical Termination:

- Maximum length = 11 meters including the bend or adaptor connected directly to the boiler.
- Effective flue length for the following:

Elbow	Equivalent To Straight Length
45 Degree	0.5 meter
90 Degree	1.0 meter

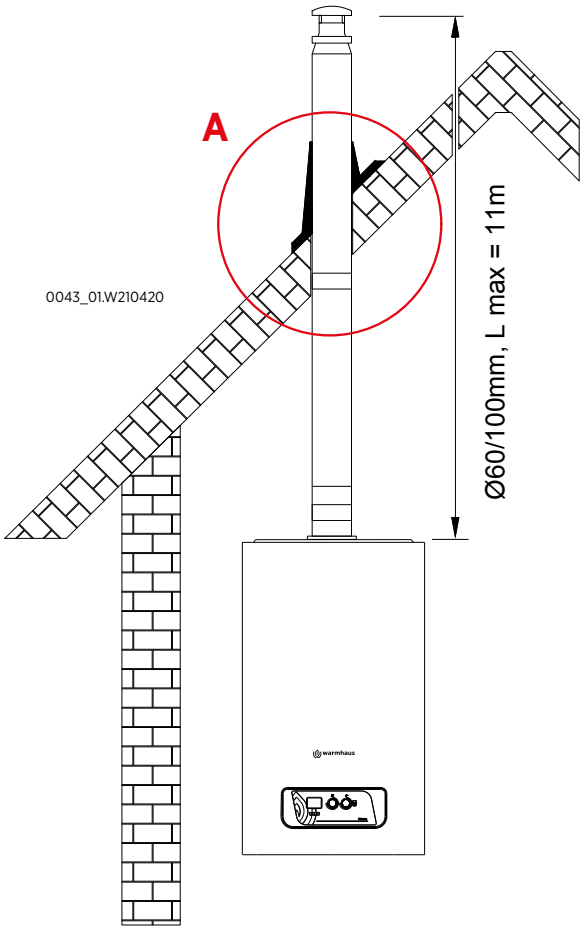

Figure 3.15. Vertical flue set installation

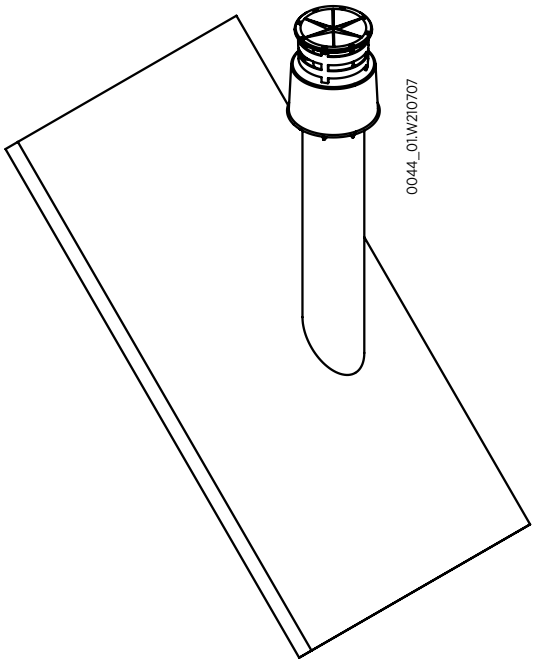

Figure 3.16. Waste gas vertical outlet chimney set and Pitched Roof Outlet Tile part installation for Roof

INFORMATION: The vertical flue terminal can be fitted to both flat and pitched surfaces.

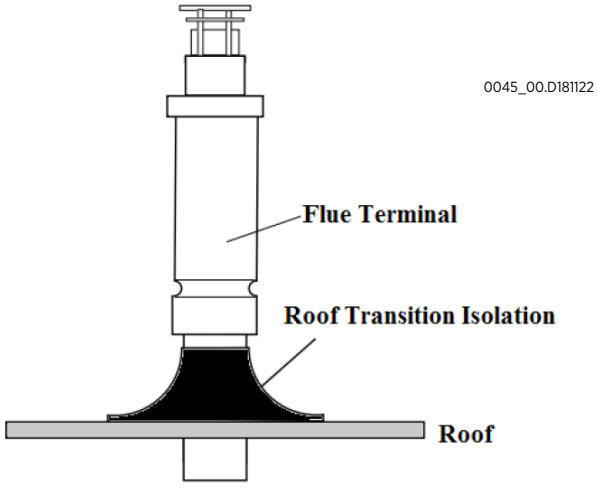

Figure 3.17. Waste gas vertical outlet flue set Roof insulation and flue transition part

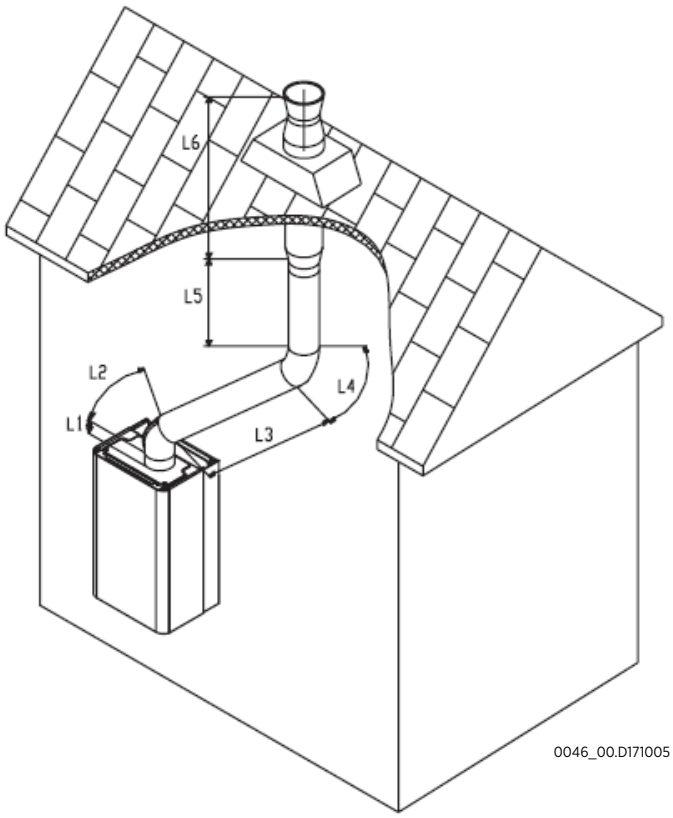

Figure 3.18. Vertical flue set installation application.

Implementation:

L1 = 0.3 m
L2 = 0.5 m. (45° elbow equivalent length)
L3 = 2.0 m.
L4 = 0.5 m. (45° elbow equivalent length)
L5 = 1.0 m.
L6 = 1.5 m.
L Total =6.3 m.
6.3 m. ≤ Lmax = 11 m.

Correct in implementation.

3.12. Concentric Flue Kits For Condensing Boilers (Ø60/100 mm)

	Product Name	Product Code
 0047_03.D210120	(Ø60/100) Condensing Concentric Horizontal Flue Set $L_{Horizontal} = L_{From\ the\ center\ of\ the\ elbow} + L_{Terminal}$ L_{Total} = 115 + 790 = 905 mm	15311014000002 (White)
 0048_03.D210120	(Ø60-100) Condensing Vertical Flue Set with Adapter L= [L_{Term} + $L_{Extpipe}$+$L_{Adapter}$=1000+500+145] = 1645 mm Extension Parts: (Ø60/100) Condensing Flue Extension, $L_{Extpipe}$=500 mm, (Ø60/100) Condensing Vertical Adapter, L_{Adapt}=145 mm	15311660600013 (Black-White)
 0049_03.D210120	(Ø60/100) Condensing Flue Extension L=500 mm	15311660600014 (White)
 0050_03.D210120	(Ø60/100) Condensing Flue Extension L=1000 mm	15311660600015 (White)
 0051_03.D210120	(Ø60/100) Condensing Flue Extension L=2000 mm	15311660600016 (White)
 0052_03.D210120	(Ø60/100) Condensing 45° Elbow	15311660600017 (White)
 0053_03.D210120	(Ø60/100) Condensing 90° Elbow L=170 mm	15311660600018 (White)
 0054_03.D210120	(Ø60/100) Condensing Vertical Adapter L=130 mm	15311660600019 (White)

3.13. Plume Displacement Kits Ø60 mm

	Product Name	Specification	Product Code
 0058_01.D210120	Plume Displacement Terminal Kit	With 1 m Extension Pipe, Elbow(87º), Plume Terminal and Bracket	15311660600031
 0059_01.D210120	Plume Displacement Kit Elbow	87º	15311660600032
 0060_01.D210120	Plume Displacement Kit Elbow	45º	15311660600033
 0061_01.D210120	Plume Terminal	87º	15311660600034
 0062_01.D210120	Flue Pipe Support Bracket		15311660600035
 0063_01.D210120	Plume Displacement Kit Extension	1000 mm	15311660600036

3.14. Recommendations of Plume Kit Installation

NOTE: Due to the nature of the boiler a plume of water vapour will be discharged from the flue. This should be taken into account when siting the flue terminal.

1. The following guidelines indicate the general requirements for siting balanced flue terminals. For GB recommendations are given in BS 5440 Pt 1. For IE recommendations are given in the current edition of I.S. 813 "Domestic Gas Installations".
2. If the terminal discharges onto a pathway or passageway, check that combustion products will not cause a nuisance and that the terminal will not obstruct the passageway.
3. If a terminal is less than 2 metres above a balcony, above ground or above a flat roof to which people have access, then a suitable terminal guard must be provided.

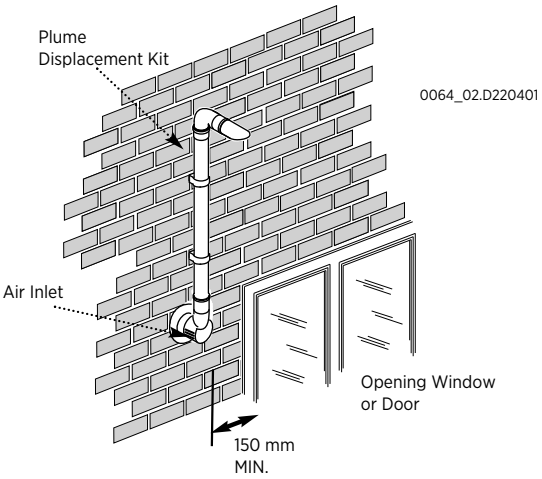

Figure 3.19. Installation Position of Plume Displacement Set to Window or Door

IMPORTANT:
• The terminal position must ensure the safe and nuisance - free dispersal of combustion products.

IMPORTANT: If fitting a Plume Displacement Flue Kit, the air inlet must be a minimum of 150 mm from any opening windows or doors.

3.15. Condensate Connection

Internal Condensate Pipe Discharge Termination

0065_00.WUK200821

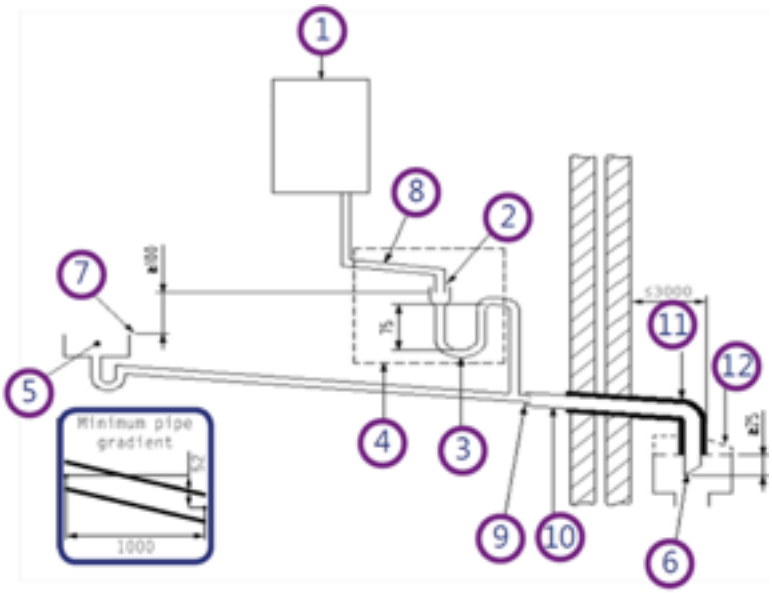

Figure 3.20. Connection of a condensate discharge pipe downstream of a sink, basin, bath or shower waste trap.

1 - Boiler

2 - Visible air break

3 – 75 mm trap

4 - Visible air break and trap not required if there is a trap with a minimum condensate seal of 75 mm incorporated in the boiler in this case the 100mm is measured to the trap in the boiler.

5 - Sink, basin, bath or shower.

6 - Open end of condensate discharge pipe direct into gully 25mm min below grating but above water level: end cut at 45 degree.

7 - Sink lip

8 - Minimum internal diameter 19mm

9 - Pipe size transition

10 - Minimum internal diameter 30mm

11 - Water/Weatherproof insulation

12 - Drain cover / leaf guard

Internal Condensate Pipe Discharge Termination

0066_00.WUK200821

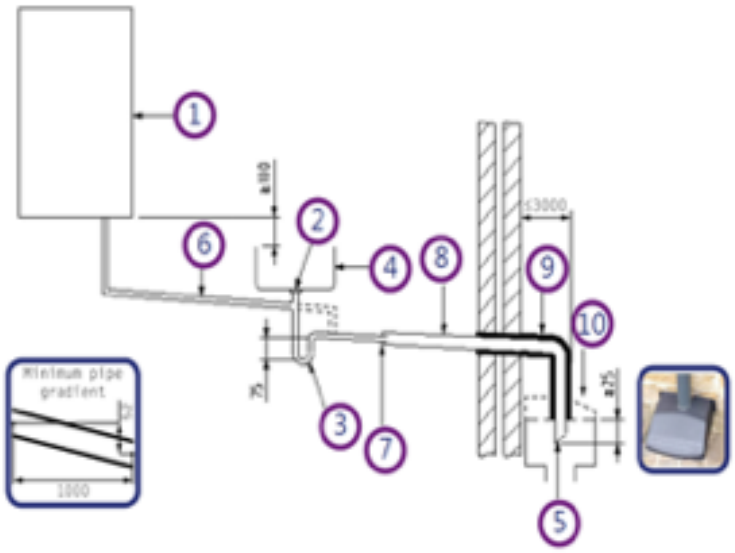

Figure 3.21. External termination to rainwater downpipe (NB only combined foul/rainwater drain)

Connection of a condensate discharge pipe up-stream of a sink, basin, bath or shower waste trap.

1 - Boiler

2 - Visible air break at plug hole – alternative connection can be below sink trap

3 - 75 mm sink, basin, bath or shower waste trap

4 - Sink, basin, bath or shower with integral overflow

5 - Open end of condensate discharge pipe direct into gully 25 mm min below grating but above water level; end cut at 45 °

6 - Minimum internal diameter 19 mm

7 - Pipe size transition

8 - Minimum internal diameter 30 mm

9 - Water/weatherproof insulation

10 - Fit drain cover/leaf guard

Internal Condensate Pipe Discharge Termination

0067_00.WUK200821

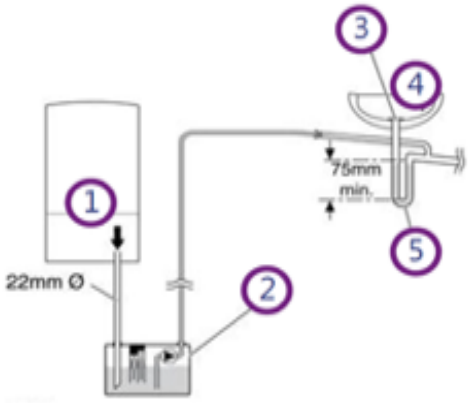

Figure 3.22. Connection of a condensate pump - typical method.

1 - Condensate discharge from boiler

2 - Condensate pump

3 - Visible air break at plug hole

4 - Sink or basin with integrated overflow

5 - 75mm sink waste trap

Note – Any external pipe work should be insulated, pipe cut at 45 degrees and a drain/ leaf guard fitted.

Internal Condensate Pipe Discharge Termination

0068_00.WUK200821

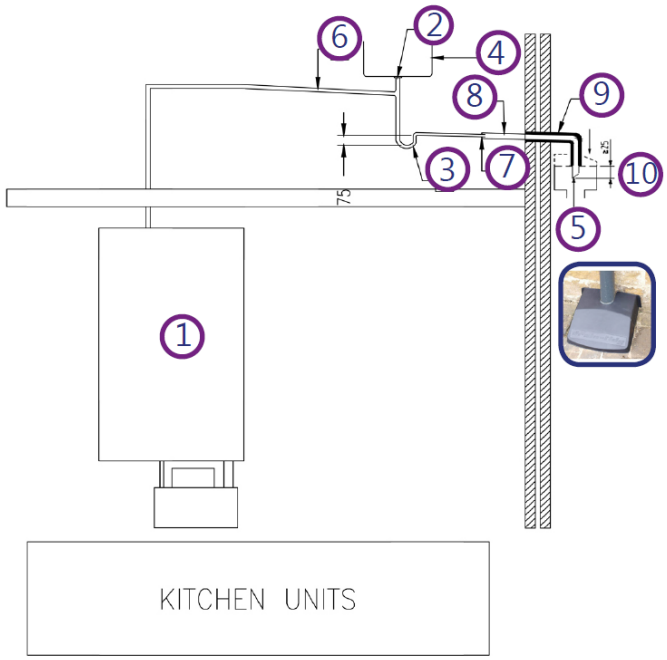

Figure 3.23. Connection of a condensate pump - typical method.

1 – Boiler

2 - Visible air break at plug hole

3 - 75 mm sink, basin, bath or shower waste trap

4 - Sink, basin, bath or shower with integral overflow.

5 - Open end of condensate discharge pipe direct into gully 25 mm min below grating but above water level; end cut at 45 ° Note – the maximum external condensate discharge length is 3 metres.

6 - Minimum internal diameter 19 mm

7 - Pipe size transition

8 - Minimum internal diameter 30 mm

9 - Water/weatherproof insulation

10 - Fit drain cover/leaf guard

Note – Any external pipe work should be insulated, pipe cut at 45 degrees and a drain/ leaf guard fitted.

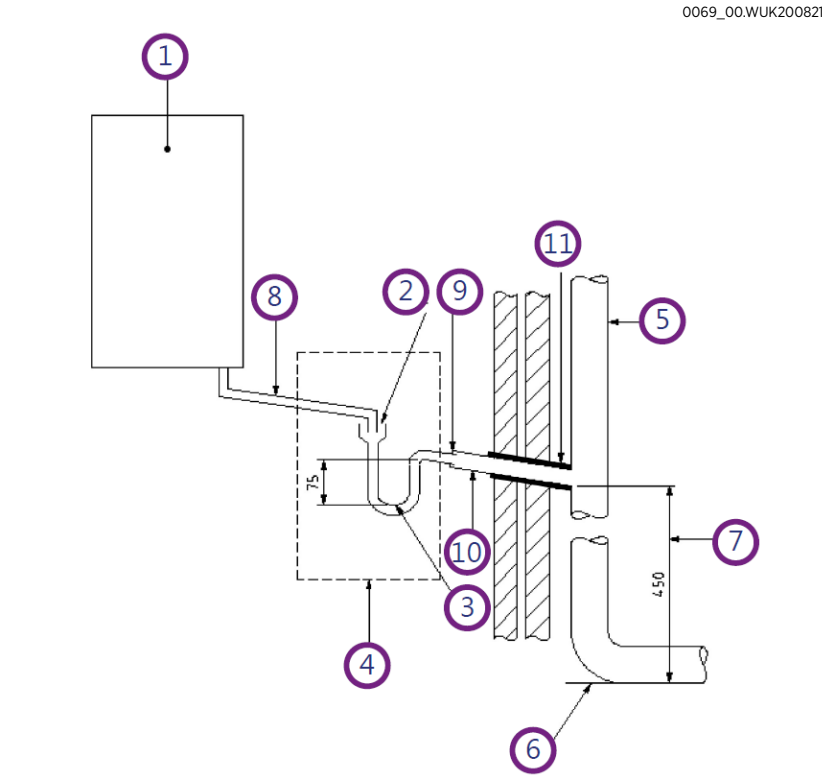

Figure 3.24. Connection of condensate discharge pipe to external soil and vent stack.

1 – Boiler
2 - Visible air break
3 - 75 mm trap
4 - Visible air break and trap not required if there is a trap with a minimum condensate seal of 75mm incorporated into the boiler.
5 - Soil and vent stack.
6 – Invert
7 - 450mm minimum up to three storeys
8 - Minimum internal diameter 19 mm
9 - Pipe size transition point
10 - Minimum internal diameter 30mm
11 - Water/weather proof insulation

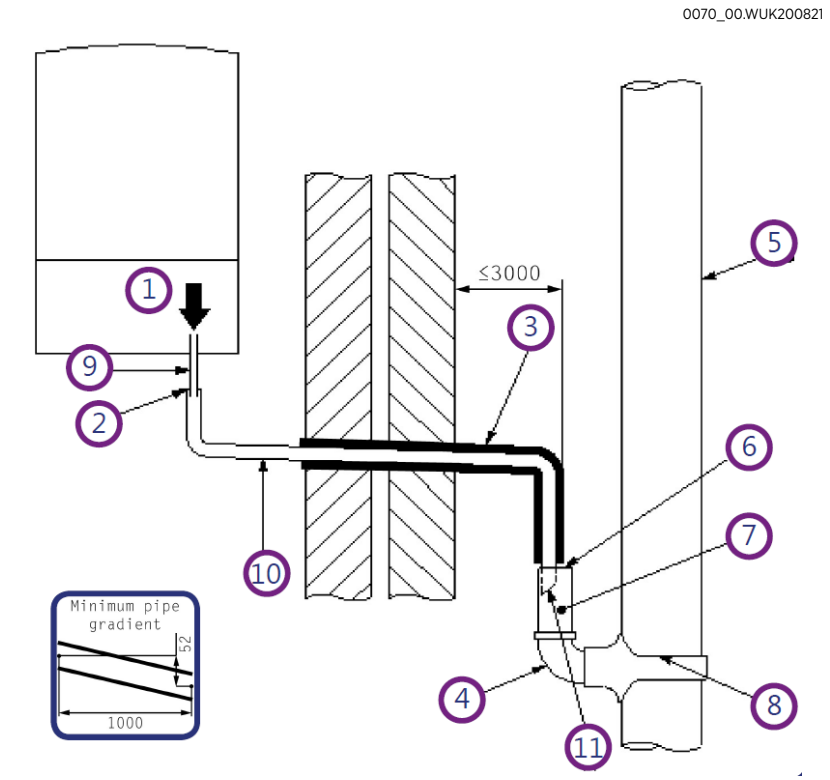

Figure 3.25. External termination to rainwater downpipe (NB only combined foul/rainwater drain)

1 Condensate discharge pipe from boiler
2 Pipe size transition point
3 Water/weatherproof insulation
4 43 mm 90° male/female bend
5 External rainwater pipe into foul water
6 External air break
7 Air gap
8 68 mm PVCu strap on fitting
9 Minimum internal diameter 19 mm
10 Minimum internal diameter 30 mm
11 End cut at 45°

External Connections

0071_00.WUK200821

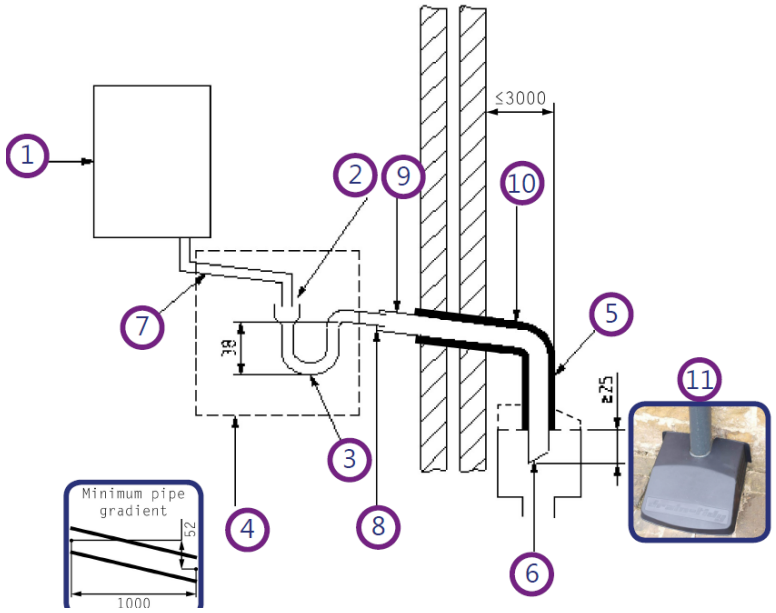

Figure 3.26. External drain, gully or rainwater hopper

1 Boiler

2 Visible air break

3 38mm minimum trap

4 Visible air break and trap not required if there is a trap with a minimum condensate seal of 38 mm incorporated into the boiler – refer to manufacturer's instructions

5 External length of pipe 3 m maximum

6 Open end of condensate discharge pipe direct into gully 25 mm min below grating but above water level; end cut at 45 °

7 Minimum internal diameter 19 mm

8 Pipe size transition point

9 Minimum internal diameter 30 mm

10 Water/weatherproof insulation

11 Fit drain cover/leaf guard

Internal Condensate Pipe Discharge Termination

0072_00.WUK200821

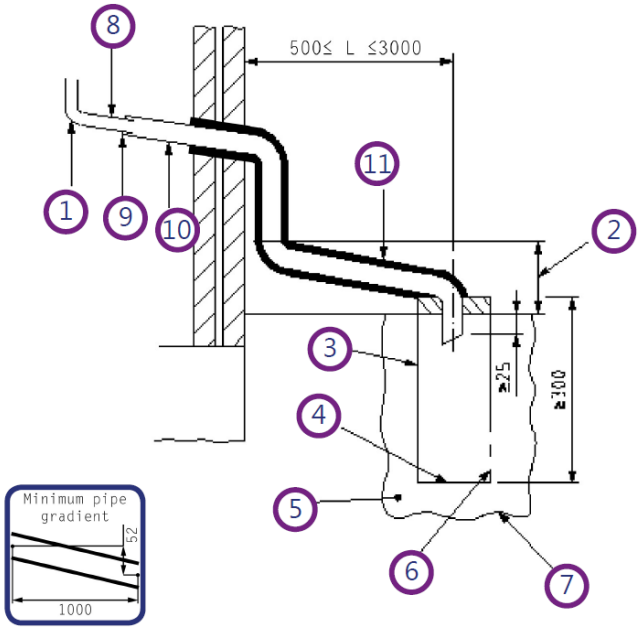

Figure 3.27. Example of a purpose made soakaway

1 Condensate discharge pipe from boiler

2 Ground (this section of the condensate discharge pipe may be run either above or below ground level); End cut at 45°

3 Diameter 100 mm minimum plastic tube

4 Bottom of tube sealed

5 Limestone chippings

6 Two rows of three 12 mm holes at 25 mm centres, 50 mm from bottom of tube and facing away from house

7 Hole depth 400 mm minimum by 300 mm diameter

8 Minimum internal diameter 19 mm

9 Pipe size transition point

10 Minimum internal diameter 30 mm

11 Water/weatherproof insulation

3.16. Glowa Combi Boiler Wiring Diagram

Wiring Diagram

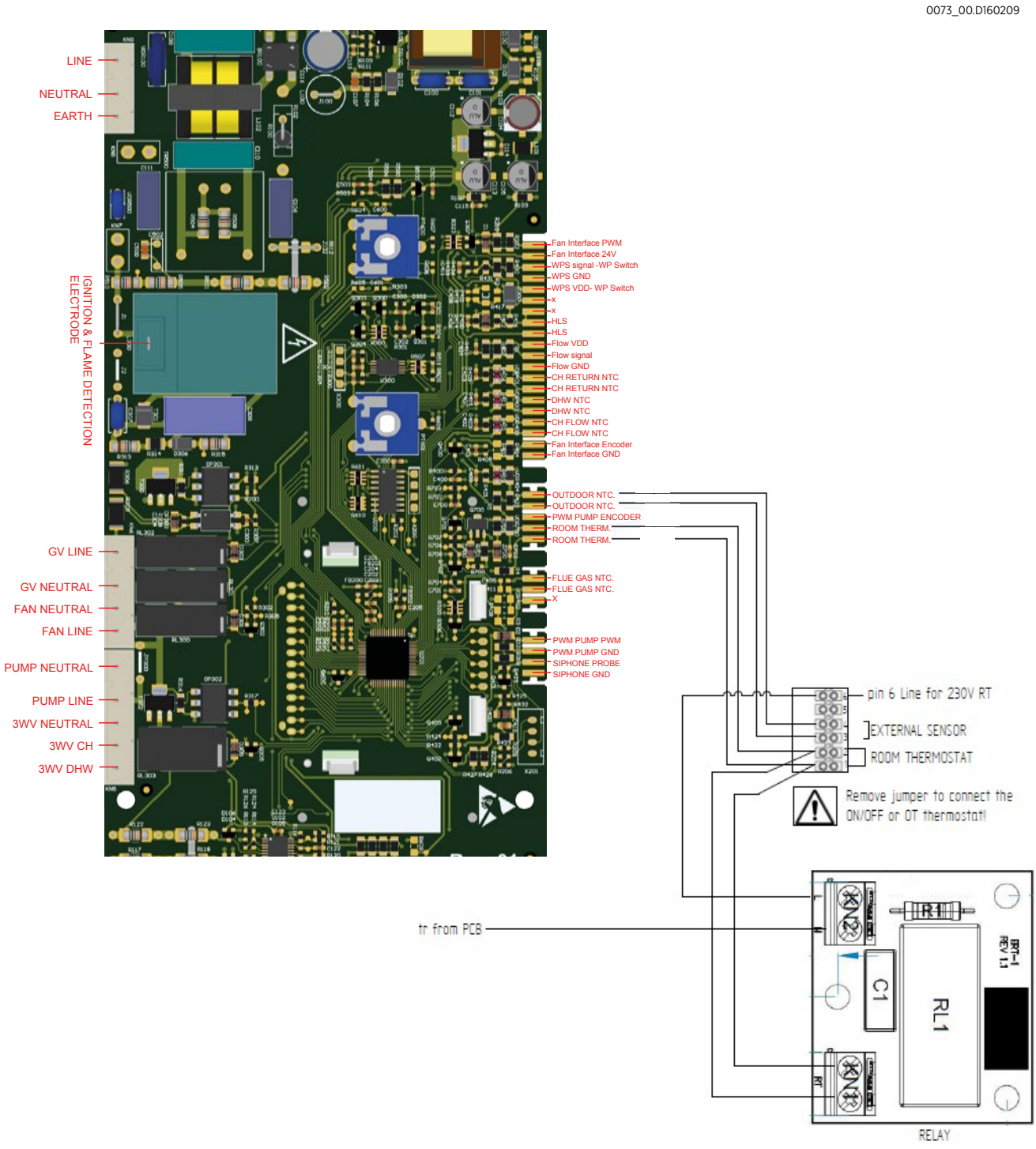

Figure 3.28. Wiring diagram

3.16.1. External Control Connection / Low Voltage Installation

CAUTION

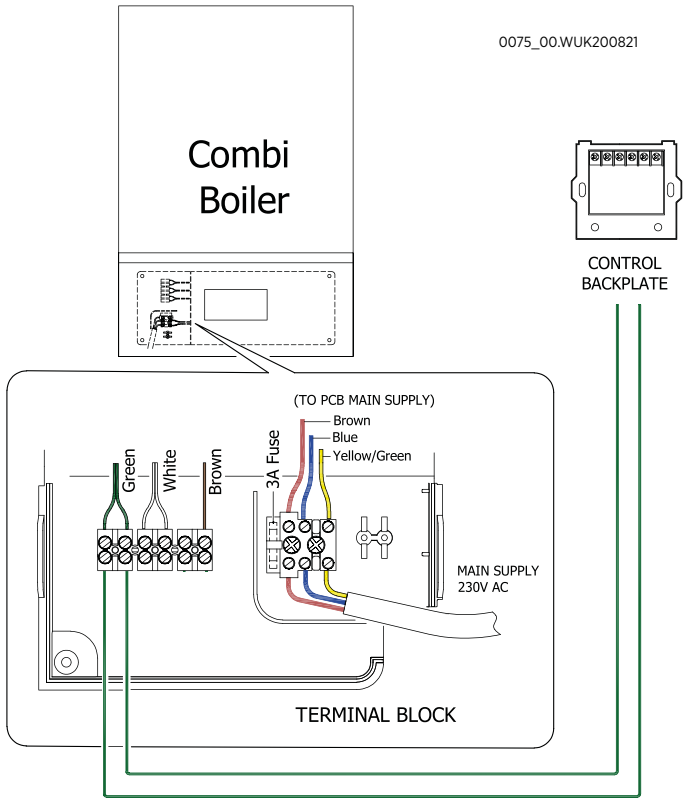

Volt free connection 2 green wires

Figure 3.29. External Control Connection / Low Voltage Installation

THE GREEN CONNECTIONS ON OUR TERMINAL CONNECTOR ARE LOW VOLTAGE AND 240V MUST NOT BE CONNECTED TO THESE.

If your external controls have a 240 V output then please use our 240 V relay connector.

To connect your low voltage external control, remove the green link wire and connect your two external control cables to the two green wires on the terminal connector.

3.16.2. External Control Connection / High Voltage (230 V) Installation

CAUTION

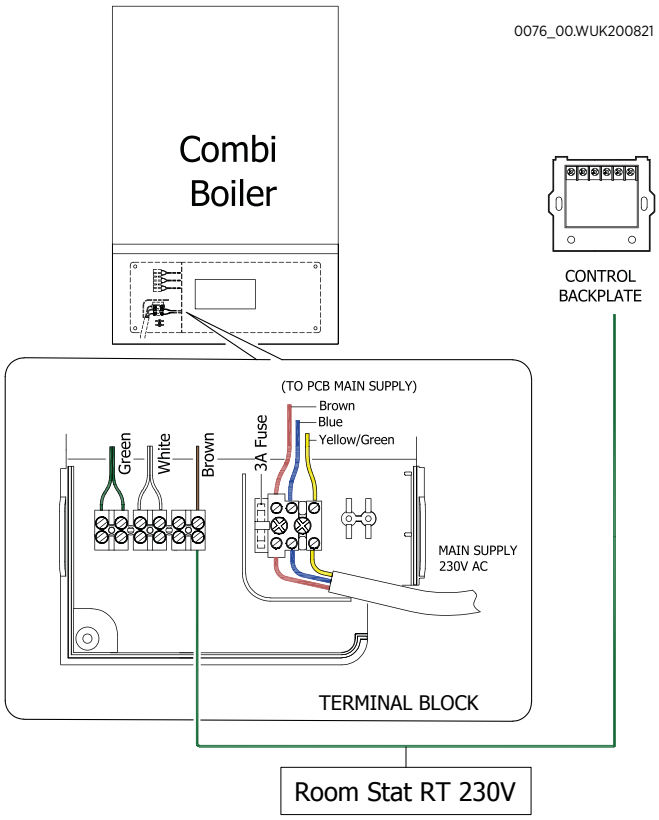

Figure 3.30. External Control Connection / High Voltage (240 V) Installation with Relay

To connect your 240 V external control, remove the green link wire on the boiler terminal connector and connect your two external control cables onto the power relay LIVE and NEUTRAL connectors supplied with the power relay.

Then connect the two LOW VOLTAGE cables connected to the power relay to the green wires on the terminal connector.

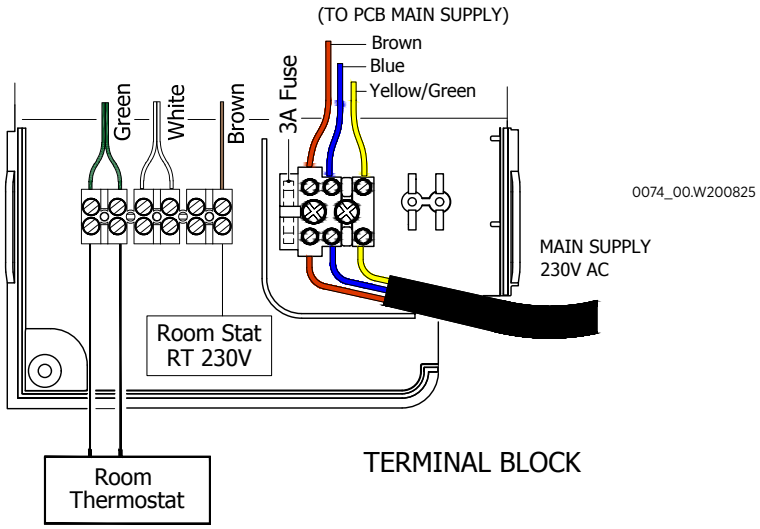

Volt free connection 2 green wires

Figure 3.31. External Control Connection / Low Voltage area and room thermostat installation.

4. COMMISSIONING

4.1. Display Function

4.1.1. SET Transparent Parameters Menu (TSP)

SET Transparent Parameters Menu (TSP)		
Designation: Glowa Wall Hung Boiler		
Object		**Type-model / Technical data**
Procedure setting or checking TsP parameters		Glowa Boiler
Pos No	**Operation**	**Description**
0		**Attention:** This procedure must be applied by authorised persons and valid for only condensing boiler. **Attention:** The parameters as indicated DO NOT CHANGE should not be adjusted / touched by any official document supplied by Warmhaus R&D.
1		First of all, boiler is operation mode. If the boiler is standby mode, press the On/Off button Turn the CH and DHW knob minimum position.
2		Long press the Mode with Reset button 5 sec.
3		Access the Parameter Menu
4	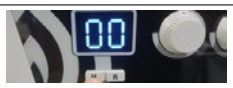	Press the Mode button decrease Parameter number in the parameter menu
5	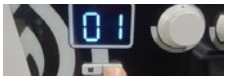	Press the Reset button increase Parameter number in the parameter menu
6		Press the On/Off button selet the parameter number in the parameter menu
7		Press the Mode button decrease Parameter value in the parameter number
8		Press the Reset button increase Parameter value in the parameter number
9	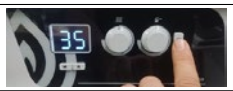	Press the On/Off button selet the parameter value in the parameter number
10		If select the P15=45 it the pass OEM parameter menu. Turn the between from A01 to A68 parameter.
11	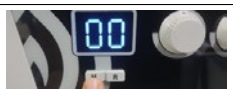	Press the Mode button decrease OEM Parameter number in the parameter menu
12		Press the Reset button increase OEM Parameter number in the parameter menu
13		Press the On/Off button selet the OEM parameter number in the parameter menu
14	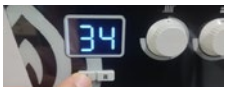	Press the Mode button decrease OEM Parameter value in the parameter number
15		Press the Reset button increase OEM Parameter value in the parameter number
16		Press the On/Off button selet the OEM parameter value in the parameter number
17		Long press the Mode with Reset button 5 sec.
18		Exit from Parameter Menu

4.1.2. Changing The Boiler Type : Combination Boiler to System Boiler

In order to convert from Combi boiler to System boiler, please select the system from the parameter list below according to the P10 parameter.

4.1.3. Parameters (Changing The Boiler Type, CH & DHW Power, Pre Heat switch off Temperature, CH post Circulation Time.....)

Transparent Parameters Menu (TSP)						
Designation :	Glowa Warmhaus Wallhung Boilers					
Object		**Type-model(s)**				
Burner Control Transparent Parameter List		Glowa Combi Boiler				
NO	**Parameter**	**Value Field**	**GLOWA 20 KW**	**GLOWA 24 KW**	**GLOWA 28 KW**	**GLOWA 33 KW**
P00	IGNITION SOFT START LEVEL – (NG, A01 = 0)	%0 - %99	35%	35%	35%	35%
P01	IGNITION SOFT START LEVEL – (LPG, A01 = 1)	% 0 - 99	50%	50%	50%	50%
P02	MAXIMUM CH HEATING	% 0 - 99	80%	85%	85%	85%
P03	PUMP OVERRUN TIME AFTER CH DEMAND (0-99 second)	0-99	30	30	30	30
P04	FAN POST PURGE TIME AFTER CH or DHW DEMAND (0 – 99 second)"	0-99	10	10	10	10
P05	AFCT WAIT TIME (0 minute – 99 minute)	0-99	3	3	3	3
P06	CH SWEEP FUNCTION 0: OFF 1: MIN POWER 2: MAX POWER"	0-2	0	0	0	0
P07	OUTDOOR TEMPERATURE COMPANSATION ACTIVATION 0: OTC DISABLED 1: OTC ENABLED	0-1	0	0	0	0
P08	K FACTOR FOR OTC (5 - 35)	(5 - 35)	20	20	20	20
P09	WATER PRESSURE CONTROL TYPE 1: Water pressure sensor with 0.5V – 2.5V output 2: Water pressure sensor with 0.5V – 3.5V output 3: Water pressure switch	(1-3)	1	1	1	1
P10	HYDRAULIC CONFIGURATION TYPE 0: Monothermic 1: Storage Tank 2: Only heating	(0-2)	0	0	0	0
P11	STORAGE TANK DHW HYSTERISIS ON (1-10 °C)"	(1-10 °C)	3	3	3	3
P12	STORAGE TANK CH FLOW TEMPERATURE DELTA (5 – 20 °C)	5 – 20 °C	10	10	10	10
P13	STORAGE TANK ANTILEGIONELLA TIMEOUT 0: Disabled 1- 15 Days	0 - 15	7	7	7	7

Transparent Parameters Menu (TSP)						
Designation :	Glowa Warmhaus Wallhung Boilers					
Object		**Type-model(s)**				
Burner Control Transparent Parameter List		Glowa Combi Boiler				
NO	**Parameter**	**Value Field**	**GLOWA 20 KW**	**GLOWA 24 KW**	**GLOWA 28 KW**	**GLOWA 33 KW**
P14	CH ECO/COMFORT TYPE 0: Eco 1: Comfort	0-1	0	0	0	0
P15	PASSWORD FOR INSTALLER & OEM PARAMETERS 23: INSTALLER 45: OEM	0-99	0	0	0	0
A01	GAS TYPE SELECTION 0: NG 1: LPG	0-1	0	0	0	0
A02	CH HEATING TYPE 1: Radiator 2: Floor	1 – 2	1	1	1	1
A04	MIN FAN SPEED – NG 10 – 40 (Values are given in RPM /100) eg. 17 means 1700 RPM	(10 - 40)	15	15	17	17
A05	MIN FAN SPEED – LPG 10 – 40 (Values are given in RPM /100) eg. 17 means 1700 RPM	(10 - 40)	14	14	17	17
A06	MAX FAN SPEED – NG 40 – 85 (Values are given in RPM /100) eg. 62 means 6200 RPM	(40 - 85)	58	61	63	65
A07	MAX FAN SPEED – LPG 40 – 70 (Values are given in RPM /100) eg. 61 means 6100 RPM	40 - 70	54	56	59	61
A08	DELTA T (CH ACTUAL TEMP –DHW ACTUAL TEMP) FOR EXCHANGER (10 – 20 °C)"	(10 - 20)	17	17	17	17
A12	DHW FLOW TYPE 0: Flow switch 1: Flow sensor	0 - 1	1	1	1	1
A14	CH POWER INCREASE RAMP 0 – 99 minutes	0 - 99	3	3	3	3
A17	DHW CONTROL PROBE 0: DHW PROBE 1: CH PROBE	0-1	0	0	0	0
A23	PUMP MANAGEMENT 0: ON/OFF PUMP 1: PWM PUMP 2: PWM PUMP WITHOUT ENCODER	0-2	2	2	2	2
A24	CH PWM PUMP SPEED CONTROL (if A23 = 1) 30-98 : %30 - %100 99 : AUTO	30 - 99	99	99	99	99
A25	ΔT SET FOR CH PWM PUMP SPEED CONTROL (if A23 = 1 and A24 = 99) 10 - 35 °C"	(10 - 35)	25	25	25	25
A27	INERTIA FOR ΔT PUMP SPEED CONTROL (if A23 = 1 and A24 = 99) 1 - 90 seconds	(1 - 90)	5	5	5	5
A29	PUMP CAPACITY @ DHW MODE 50 - 99 %	(50 - 99)	99	99	99	99

Transparent Parameters Menu (TSP)						
Designation :	Glowa Warmhaus Wallhung Boilers					
Object		**Type-model(s)**				
Burner Control Transparent Parameter List		Glowa Combi Boiler				
NO	**Parameter**	**Value Field**	**GLOWA 20 KW**	**GLOWA 24 KW**	**GLOWA 28 KW**	**GLOWA 33 KW**
A30	MINIMUM PUMP CAPACITY @ CH MODE (if A23 = 1 and A24 = 99) 30.....99 %	(30 - 99)	45	45	45	45
A36	DHW FLOW ON OFSET FOR CORRELATED TEMPERATURE (A40 = 0) 0 to 10 °C	0 - 10	3	3	3	3
A37	DHW FLOW OFF OFSET FOR CORRELATED TEMPERATURE (A40 = 0) 0 to 10 °C	0 - 10	7	7	7	7
A38	PUMP OVERRUN TIME AFTER DHW DEMAND 0 – 99 second	0 - 99	60	60	60	60
A40	DHW TURN-OFF AND TURN-ON TEMPERATURES SELECTION 0: CORRELATED TEMPERATURE 1: ABSOLUTE TEMPERATURE	0 - 1	1	1	1	1
A41	DHW FLOW METER DELAY TIME 0 – 20 second	0 - 20	1	1	1	1
A43	CH FLOW ON OFSET FOR AFCT EXIT 0 to 10 °C"	0 - 10	0	0	0	0
A44	CH FLOW OFF OFSET FOR AFCT ENTRANCE 0 to 10 °C	0 - 10	5	5	5	5
A53	FLUE GAS TEMPERATURE SENSOR CONFIGURATION 0: Flue gas temperature sensor not available 1: Flue gas temperature sensor available	0 - 1	1	1	1	1
A60	PREPURGE TIME 3 - 45 seconds	(3 - 45)	3	3	3	3
A61	IGNITION STABILISATION TIME 1 - 5 seconds"	(1 - 5)	2	2	2	2
A62	MINIMUM FAN DUTY CYCLE AT MAX CAPACITY 1 – 99 %	1-99%	25	25	25	25
A63	RECUPERATOR SELECTION 0: Recuperator not available 1: Recuperator available"	(0-1)	0	0	0	0
A64	CLIMATE ZONE SELECTION 1: warmest climate 2: 3: 4: coldest climate	(1-4)	3	3	3	3
A65	DHW OPERATION MODE 0: normal 1: comfort	(0-1)	0	0	0	0
A66	DEVICE MODEL 0-31	(0-31)	8	9	10	11
A67	STORAGE TANK AFCT WAIT TIME 1 – 10 minutes"	(1 -10)	3	3	3	3
A68	STORAGE TANK MAX CAPACITY %0 - %100	0-100%	100	100	100	100

4.2. Service Mode

Service Mode			
Designation: Glowa Wall Hung Boiler			
Object		**Type-model / Technical data**	**Mark (s) of conformity**
Procedure Service Mode		Glowa Boiler	granted by Warmhaus R&D
Pos No	**Operation**	**Description**	
0		**Attention:** This procedure must be applied by authorised persons and valid for only Glowa combi boiler. **Attention:** Serviceman time out is 30 minute.	
1		First of all, boiler is operation mode. If the boiler is standby mode, press the On/Off button	
2		Long press the Mode with Reset button 5 sec. When at the CH knob and DHW knob maximum position **Attention:** Make sure the all radiator valves are opened and during serviceman mode if boiler can reach the maximum CH limit temperature otherwise process will interrrupt. Make sure boiler frontal casing is totally closed and sealing of the boiler body is secured during serviceman mode."	
3		Access the Service mode "Hi" (maximum power) will be desplayed on the screen. Wait 30 second to be stable for fan speed.	
4	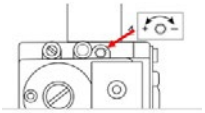	According to flue gas analyses device, make a gas adjastment at the gas valve maximum place CO2 value is between %9.00-%9.35 in the flue gas analyses device	
5		For "Lo" (minimum power) combustion CH knob minimum position. The "Lo" will be displayed on the screen. Wait 30 second to be stable for fan speed.	
6	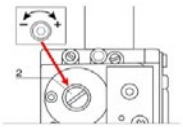	According to flue gas analyses device, make a gas adjastment at the gas valve maximum place CO2 value is between %8.70-%9.10 in the flue gas analyses device	
7		Long press the Mode with Reset button 5 sec.	
8		Exit from Service Menu	

4.3. CO/CO2 Combustion Check

CAUTION

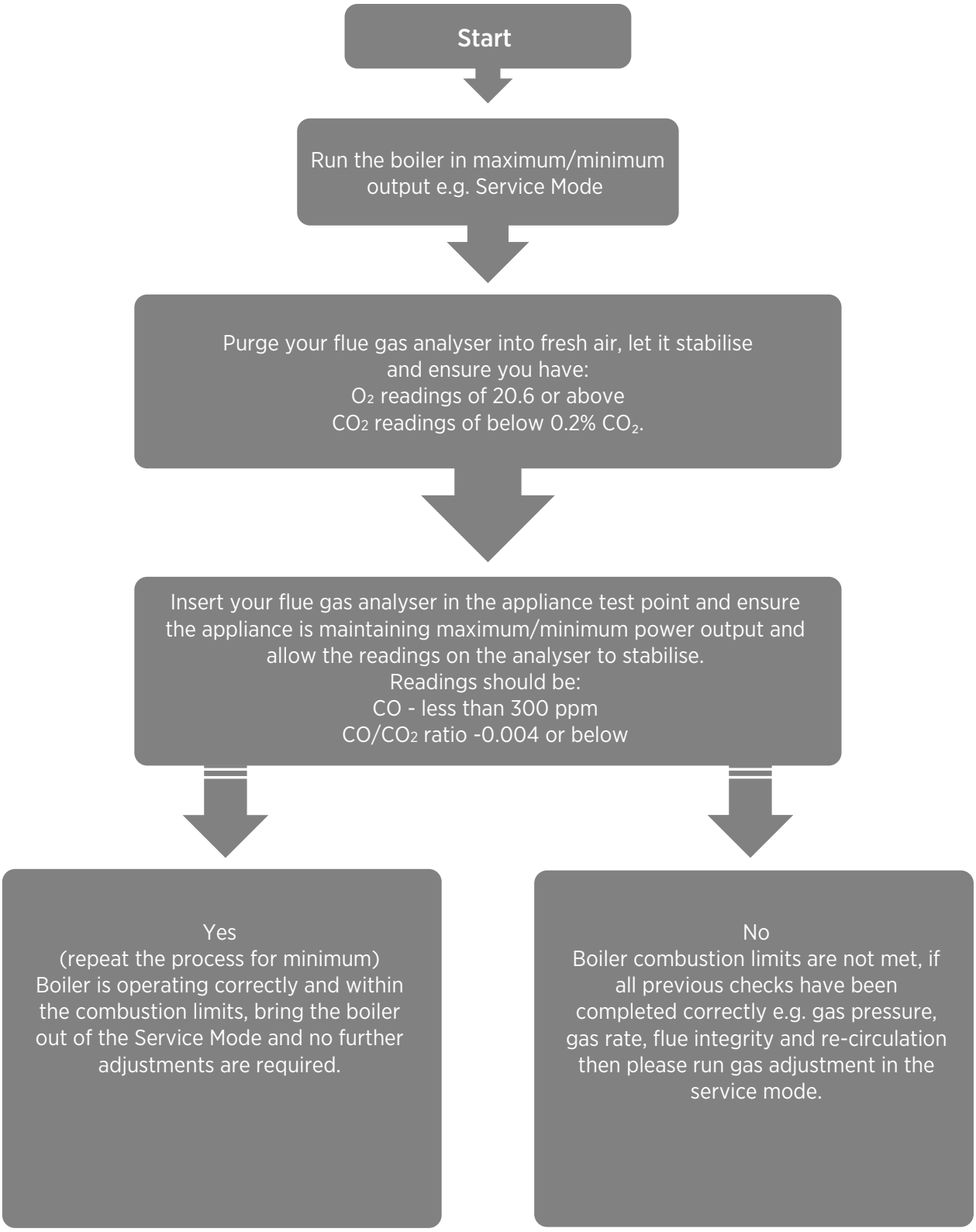

4.4. Calibration

4.4.1. Auto Calibration

ATTENTION: This procedure must only be carried by a competent Gas Safe registered engineer and if in Ireland an RGI (Registered Gas Installer)

Make sure there is no demand on the boiler before starting the gas adjustment and the front cover is fitted!

Step 1: : Long press the Mode with Reset button 5 sec. When at the CH knob and DHW knob maximum position

Step 2: Access the Service mode "Hi" (maximum power) will be displayed on the screen. Wait 30 second to be stable for fan speed.

Step 3: According to flue gas analyses device, make a gas adjustment at the gas valve maximum place CO2 value is between %9.00-%9.35 in the flue gas analyses device

Step 4: For "Lo" (minimum power) combustion CH knob minimum position. The "Lo" will be displayed on the screen. Wait 30 second to be stable for fan speed.

Step 5: According to flue gas analyses device, make a gas adjustment at the gas valve maximum place CO2 value is between %8.70-%9.10 in the flue gas analyses device procedure and when the readings are within the tolerance press the CH + button and remove the FGA.

Step 6: Long press the Mode with Reset button 5 sec. Exit from Service Menu

Our combi boiler is suitable for use with %20 H2 mixed (H2 blend) gas. If the boiler is to be used with H2 mixture gas, CO2 should be set to a maximum of 9.00% by setting the gas at maximum power.

Combustion Values for Natural Gas G20 / G25		**Natural Gas - G20 / G25 (20 mbar)**			
		CO2 (%)	**O2(%)**	**CO(ppm)**	**NOx(ppm)**
Maximum Power = HI	Nominal Value	9,2	5,2	135	18
	Permitted Tolerance Value	9,00-9,35	4,9-5,5	105-150	15-30
Minimum Power = LO	Nominal Value	8,9	4,8	7	15
	Permitted Tolerance Value	8,70-9,10	4,5-5,1	3-12	10-20

Combustion Values for LPG G30 / G31		**Natural Gas - G30 / G31 (37 mbar)**			
		CO2 (%)	**O2(%)**	**CO(ppm)**	**NOx(ppm)**
Maximum Power = HI	Nominal Value	10,5	5,4	165	20
	Permitted Tolerance Value	10,0-10,8	5,0-5,7	120-190	15-25
Minimum Power = LO	Nominal Value	10,2	5,2	8	12
	Permitted Tolerance Value	10,0-10,5	5,0-5,4	0-15	6-20

Attention: This procedure must be applied by authorised persons and valid for only condensing boiler.

Attention : Gas inlet pressure must be 20 mbars for NG (G20)

Attention : Gas inlet pressure must be 37 mbars for LPG (G31)

Attention: Do not ever change gas inlet pressure during gas adjustment or after gas adjustment

4.4.2. Deareation Mode

Deareation Mode			
Designation: Glowa Wall Hung Boiler			
Object		**Type-model / Technical data**	**Mark (s) of conformity**
Procedure Dearetion Mode		Glowa Boiler	granted by Warmhaus R&D
Pos No	**Operation**	**Description GB**	
0		**Attention:** This procedure must be applied by authorised persons. **Attention:** During this function make sure the boiler water pressure is OK and automatic air vent cap is open. During operation if water pressure reduces then fill full the water to the installation by using filling tap or loop.	
1	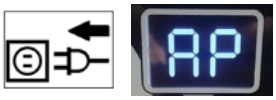	First of all, switch on the boiler and screen shown the AP.	
2		Air purge mode continue 3 minutes.	
3		If you reject the air purge mode press the Reset button.	

4.5. Information Menu Access

Info Menu			
Designation: Glowa Wall Hung Boiler			
Object		**Type-model / Technical data**	**Mark (s) of conformity**
Procedure Info Menu		Glowa Boiler	granted by Warmhaus R&D
Pos No	**Operation**	**Description GB**	
0		**Attention:** This procedure must be applied by authorised persons.	
1		First of all, boiler is in operation mode. If the boiler is standby mode, press the On/Off button	
2		Turn the CH knob maximum position and DHW knob minimum position..	
3		Long press the Mode with Reset button 5 for.	
4		Access the Info Menu	
5		Press the Mode button decrease Info number in the info menu	
6	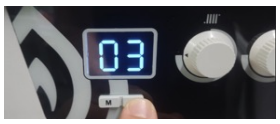	Press the Reset button increase Info number in the info menu	
7		INFO MENU=n X value shows following information n 01: Actual DHW Temperature n 02: Actual CH Return Temperature n 03: Actual Flue Gas Temperature n 04: Actual Outdoor Temperature (if available and if P07 = 1) n 05: Actual CH Flow Temperature n 06: Target Fan Speed (RPM/100) n 07: Actual Fan Speed (RPM/100) n 08: Actual PWM pump percentage n 09: CH SET / CH Calculated SET Temperature n 10:Water pressure value (in case of pressure sensor) n 11: Last seen Error Code n 12: Second-Last seen Error Code n 13: Third-Last seen Error Code n 14: Fourth-Last seen Error Code n 15: Fifth-Last seen Error Code	
8		Long press the Mode with Reset button 5 sec.	
9		Exit from Info Menu	

4.6. Pre-Commissioning Checklist

CAUTION

- Ensure all service pipes including the heating pipe work is correctly installed and leak free.
- Ensure all isolation valves connected under the boiler are in the fully open position
- Inspect the gas information on the boiler data badge and ensure that the gas supply connected to the boiler can deliver the working requirements and that the gas supply has been correctly purged before lighting the boiler.
- Check the digital pressure reading on the boiler display screen and ensure it is between 1.0 – 1.5 bar when the boiler is cold, and the system has been bled of all excess air.
- Make sure the system and boiler are leak free from any water leakage.
- Ensure that the PRV is correctly connected to the boiler and that all pipe work and termination is installed correctly.
- Ensure the condense pipe work is connected to the boiler correctly and that the pipe work and terminal is fully connected and leak free from any water leakage.
- Check all electrical connections are connected to a 240v ac 50Hz supply with suitable isolation.
- Ensure the appliance is fully and correctly earthed.
- Check that the electric supply polarity is correct.
- Check that all external control connections are correct and that 240v ac has not been connected directly to the external control connection point located on the connection terminal block

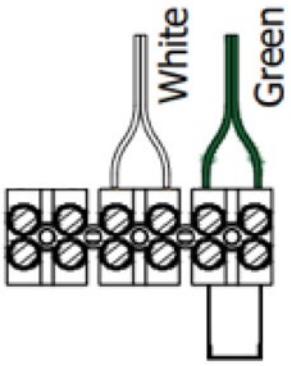

THIS LINK MUST BE REMOVED AND CONNECTED TO A VOLTAGE FREE EXTERNAL CONTROL

0079_00.W200825

Figure 4.1. External Control Connection to Terminal Block

- Ensure all flue connections are correctly made and the flue system is correctly supported.
- Any flue joints need to be fully accessible to comply with the latest regulations regarding flues in voids.
- Check and make sure the flue holes are sealed both internal and external.
- Ensure the gas supply is free from any gas leakage and that the ECV is fully open.
- Check that the system has been correctly flushed and that a system inhibitor has been added at the correct dosage.
- Ensure that the appliance is protected by an external 3 amp fuse on the incoming mains electric supply.
- If an external expansion vessel is installed please ensure the pre charge is the same as the pre charge pressure of the expansion vessel located inside the boiler.

FLUE INTEGRITY / RE-CIRCULATION CHECK

ATTENTION

Ensure that all flue joints are correctly made and sealed and check the flue is suitably supported as per the manufacturer's instructions.

Inspect the terminal position and ensure there is no obstruction and make sure the flue is sealed through both sides of the wall and if vertically installed through the roof space.

Purge your FGA into fresh air and take a note of the O2, CO2 and CO reading when successfully purged.

The boiler front cover MUST be correctly fitted and in place when carrying out this check.

Operate the boiler in maximum output by either running a DHW tap or put the boiler into service mode (please see page 38 for instructions).

Remove the air inlet test point on the flue elbow or adaptor and insert your FGA, the O2, CO2 and CO reading whilst the boiler is in operation should read the same as it did when purged into fresh air, once this is ok and complete insert the cap back into the elbow or adaptor.

Please ensure that the flue is adequately supported at the correct distances stated in the flue data section of this manual and that all flue extensions are installed with a 3% slope back to the boiler unit.

If the boiler is installed with just the horizontal flue terminal and no flue accessories then the boiler does not require the horizontal flue terminal to have a 3% slope back to the boiler as the horizontal terminal has this built in so please ensure it is installed level.

4.7. Checking Inlet Gas Pressure

ATTENTION

Isolate the appliance at the electrical supply point and turn the gas isolation valve off. This is located under the boiler.

Drop down the boiler front control panel and connect a suitable pressure gauge to the inlet test point on the gas valve.

Open the gas isolation valve and switch the appliance back on from the electrical supply point – caution should be taken as the cables around the boiler front control panel maybe live.

Put the boiler into service mode by pressing both Mode and Reset buttons together until the circle completes and the boiler display panel will show "Lo" press the DHW + button and hold briefly. When released the display panel will show "Hi", let the appliance settle in high mode for a minimum of 2 minutes and then check your pressure gauge and check to see if the dynamic pressure corresponds with the boiler minimum dynamic gas pressure as illustrated on the technical data in this manual.

After checking the pressure press both the Mode and Re-set buttons until the circle completes and the boiler will revert to the standby display. Isolate the power supply to the boiler, close the gas isolation valve and remove the pressure gauge from the inlet test point on the gas valve. Ensure the test point screw is tight and turn on the gas isolation valve and with a suitable LDF test the point for leakage.

Re-assemble the front control panel and boiler cover then switch the power supply to the boiler back on.

4.8. Testing For Gas Leaks During Use

CAUTION

Using a suitable and certified LDF and taking extreme caution that the LDF solution does not come into contact with any electrical wiring or components test all gas joints with the appliance operating in full power by operating a DHW tap.

Turn off the appliance at the electrical isolation point and clean up any residue LDF.

4.9. Check Gas Rate

CAUTION

The gas rate should be taken at the meter supplying the boiler and a visual inspection of the gas meter should be carried out before commencing to ensure it meets all relevant and current regulations and requirements.

The gas rate must be carried out in accordance to the current gas working practices.

Turn off any other gas appliances connected to the gas meter to which the boiler is directly connected, Turn the boiler to maximum (see Service Mode) and operate for approximately 10 mins to allow the appliance to warm up and for any expansion of the burner to take place (if you have issues with excess temperature in the boiler running the DHW outlet with a minimum of 12l/min will assist with this issue (for combi boilers)).

Carry out a gas rate and ensure you follow the gas rating procedure as per the current Domestic Gas Safety legislation and requirements, once the gas rate is complete instruct the boiler to exit the Service Mode (see Service Mode).

Please refer to the technical table in the boiler manual to confirm the correct gas rate.

Ensure you retain the details of the gas rate to record them in the appropriate section of the Benchmark documentation.

For smart meter installations please follow the instructions from the meter supplier for the correct usage of the display menu.

Gas Rate Info

CAUTION

It is very important to ensure the boiler gas rate is correct as this will determine how much gas is being burnt and how much heat is released from the boiler.

This is important with regards to the efficiency and safe operation of the boiler.

When carrying out a gas rate, if you are using an App based calculator to determine the figures please ensure it is a valid calculator and is from a trusted source.

Warmhaus advise you check the data shown on the calculator routinely by carrying out a gas rate as per the current gas working practices manually and compare the figures.

If the App calculator is proven to be accurate and can be used as a trusted source then Warmhaus will be happy to accept the results given by this method.

When comparing the gas rate data from your test please use the DHW figures on the data badge or the stated gas rate in the technical data chart in this manual as the reference and not the CH data.

For any additional technical data regarding this test please call Warmhaus technical on 020 7164 6233

4.10. Circulation Pump Rotation

CAUTION

Please manually rotate the impeller on the circulating pump inside the boiler before turning on the power supply to the boiler to ensure pump is not seized.

Display Functions in Standby



0007_00.W160721

Setting Flow Temperature



0080_00.W210421

Figure 4.3. Setting Flow Temperature

When the system boiler is started, a flame modulation symbol is seen at the middle section of the screen. At that position, you can increase and decrease the temperature with CH temperature adjustment buttons between 35 – 80 °C. The screen lights up when buttons are pressed and °C symbol flashes besides the CH temperature value.

4.11. Setting Up the External Controls

Ensure all wiring for the external controls are connected to the boiler and the external control as per the manufacturer's instructions and ensure that the settings are adjusted to the customer's requirements.

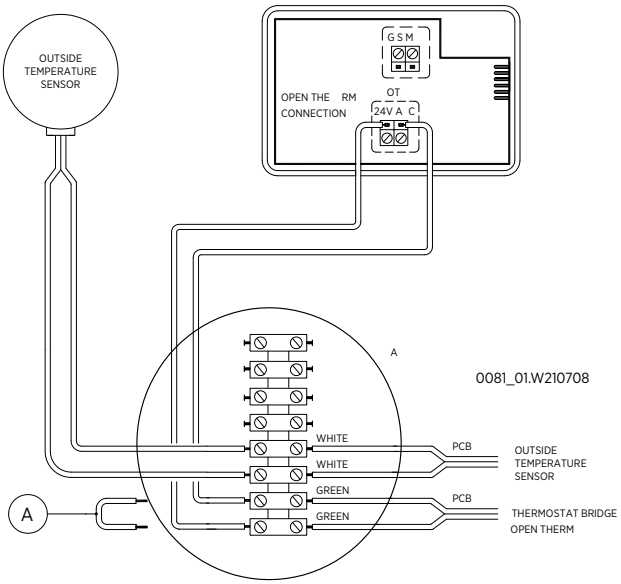

Figure 4.4. Connection of external controls

4.12. Gas conversion from NG (G20) to LPG (G31)

Gas conversion from NG (G20) to LPG (G31)			
Designation: Glowa Wall Hung Boiler			
Object		**Type-model / Technical data**	**Mark (s) of conformity**
Procedure Gas Conversation from NG to LPG		Glowa Boiler	granted by Warmhaus R&D
Pos No	**Operation**	**Description GB**	
0		**Attention:** This procedure must be applied by authorised persons and valid for only Glowa condensing boiler.. **Attention:** Gas inlet pressure must be 37 mbar for LPG (G31) **Attention:** Do not ever change gas inlet pressure during gas adjustment or after gas adjustment	
1		First of all, boiler in operation mode. If the boiler is standby mode, press the On/Off button Turn the CH and DHW to knob minimum position.	
2		Long press the Mode with Reset button 5 sec.	
3		Access the Parameter Menu and press the Reset button increase Parameter number in the parameter menu select to P15:45 OEM	
4		After that the screen will appear TSP Parameter A01=01 Value select by On/Off Button	
5		Long press the Mode with Reset button 5 sec. And exit from parameter menu	
6		Long press the Mode with Reset button 5 sec. When at the CH knob and DHW knob maximum position **Attention:** Make sure all radiator valves are opened and during serviceman mode if boiler can reach the maximum CH limit temperature otherwise process will interrrupt. Make sure boiler frontal casing is totally closed and sealing of the boiler body is secured during serviceman mode.	
7		Access the Service mode "Hi" (maximum power) will be displayed on the screen. Wait 30 second to be stable for fan speed.	
8		According to flue gas analyses device, make a gas adjustment at the gas valve maximum place CO2 value is between %10.00-%10.80 in the flue gas analyses device	
9		For "Lo" (minimum power) combustion CH knob minimum position. The "Lo" will be displayed on the screen. Wait 30 second to be stable for fan speed.	
10	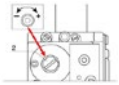	According to flue gas analyses device, make a gas adjustment at the gas valve maximum place CO2 value is between %10.00-%10.50 in the flue gas analyses device	
11		Long press the Mode with Reset button 5 sec.	
12		Exit from Service Menu	

4.13. Gas conversion from LPG (G31) to NG (G20)

Gas Conversation from LPG (G31) to NG (G20)			
Designation: Glowa Wall Hung Boiler			
Object		**Type-model / Technical data**	**Mark (s) of conformity**
Procedure Gas Conversation from LPG to NG		Glowa Boiler	granted by Warmhaus R&D
Pos No	**Operation**	**Description GB**	
0		**Attention:** This procedure must be applied by authorized persons and valid for only Glowa condensing boiler. **Attention:** Gas inlet pressure must be 20 mbar for Natural gas (G20). **Attention:** Do not ever change gas inlet pressure during gas adjustment or after gas adjustment	
1		First of all, boiler is operation mode. If the boiler is standby mode, press the On/Off button Turn the CH and DHW knob minimum position.	
2		Long press the Mode with Reset button 5 sec.	
3		Access the Parameter Menu and press the Reset button increase Parameter number in the parameter menu select to P15:45 OEM	
4		After than the screen will appear TSP Parameter A01=0 Value select by On/Off Button	
5		Long press the Mode with Reset button 5 sec. And exit from parameter menu	
6		Long press the Mode with Reset button 5 sec. When at the CH knob and DHW knob maximum position **Attention:** Make sure the all radiator valves are opened and during serviceman mode if boiler can reach the maximum CH limit temperature otherwise process will interrrupt. Make sure boiler frontal casing is totally closed and sealing of the boiler body is secured during serviceman mode.	
7		Access the Service mode "Hi" (maximum power) will be desplayed on the screen. Wait 30 second to be stable for fan speed.	
8	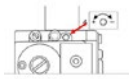	According to flue gas analyses device, make a gas adjastment at the gas valve maximum place CO2 value is between %9.00-%9.35 in the flue gas analyses device	
9		For "Lo" (minimum power) combustion CH knob minimum position. The "Lo" will be displayed on the screen. Wait 30 second to be stable for fan speed.	
10	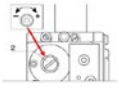	According to flue gas analyses device, make a gas adjastment at the gas valve maximum place CO2 value is between %8.70-%9.10 in the flue gas analyses device	
11		Long press the Mode with Reset button 5 sec.	
12		Exit from Service Menu	

5. SERVICING & PART REPLACEMENT

5.1. Replacement of Components - First Stage

CAUTION

- Isolate the boiler from the electric supply isolation point
- Carry out electrical safe isolation to the current standard set by the local regulator
- Turn off the gas supply by using the gas isolation valve located under the boiler (yellow handle)
- Remove the boiler front cover by unscrewing the 2 x self-tapping screws located under the boiler at the front section.
- Release the retaining latch situated on the left-hand side of the front control fascia.
- Gently drop down the front panel fascia into the service position.
- Always ensure caution not to damage any electric cable or connections whilst working on the boiler.

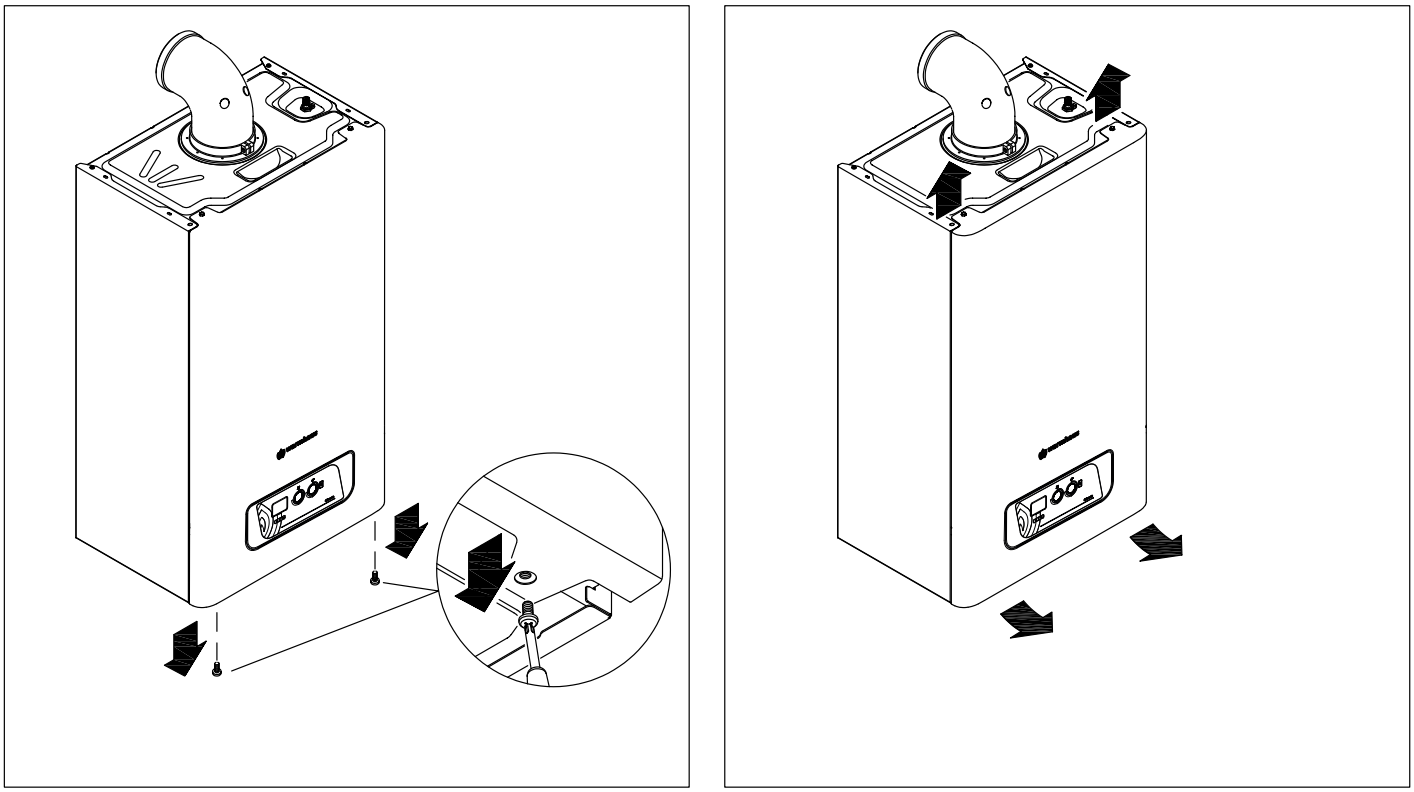

0082_00.W210120

Figure 5.1. Removing the boiler front cover

5.2. Replacement of Components - Final Stage

CAUTION

After replacing any internal component or any component that requires the front casing removal please follow all gas safety legislation set by your local governing gas body or regulator for essential checks when working on a gas appliance and Warmhaus require that you carry out the following checks as well as your industry required safety checks e.g. 26/9 checks.

- Appliance gas tightness test/test disturbed joints with LDF
- Gas rate (where at all possible)
- Combustion Check
- Ensure the correct fitting of the front casing
- Flue inspection

5.3. Draining The Boiler / CH Circuit

CAUTION

Isolate the boiler from the electric supply isolation point.

Carry out electrical safe isolation to the current standard set by the local regulator.

Isolate the CH flow and return isolation valves located under the boiler.

Ensure the auto air vent cap is open

Connect a suitable hose to the boiler drain point located at the rear of the pump under the boiler.

Ensure your drain hose is located in a suitable location for the water in the boiler to drain safely

Open the boiler drain point and release the heating system water until the boiler is fully drained.

When required close the drain point, remove the hose and re-fill the boiler and run Deareation mode.

5.4. Draining The Boiler / DHW Circuit (only for combi boilers)

CAUTION

Isolate the boiler from the electric supply isolation point.

Carry out electrical safe isolation to the current standard set by the local regulator.

Isolate the cold-water inlet isolation valve located under the boiler.

Open the lowest DHW tap or outlet and very slightly loosen the DHW connection nut under the boiler and a hissing sound should be heard allowing the water in the DHW circuit to exist the boiler through the open outlet.

When required close the DHW outlet and check the disturbed gasket on the DHW connection nut and replace if required, tighten the DHW connection nut under the boiler.

5.5. Flue Thermistor Replacement

CAUTION

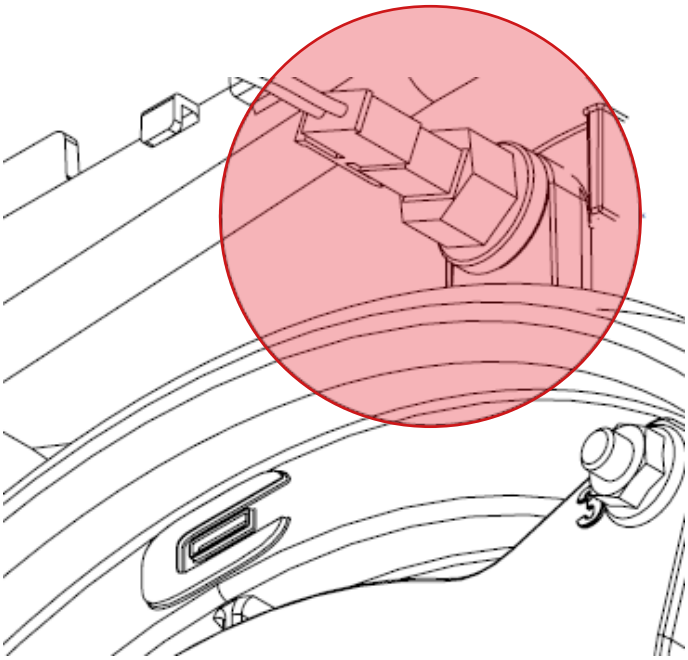

Figure 5.2. Flue Thermistor

0083_00.W210424

Please follow the steps listed in replacement of components FIRST STAGE.

Disconnect the electrical lead from the flue thermistor.

Rotate the thermistor anti-clockwise and pull the thermistor gently away from its housing.

Insert the new thermistor into the housing and rotate it clockwise and gently push the thermistor back into place.

Reconnect the thermistor lead and ensure it has made good contact and correctly located.

Please follow the step listed in replacement of components FINAL STAGE.

5.6. Ignition Electrode Replacement

CAUTION

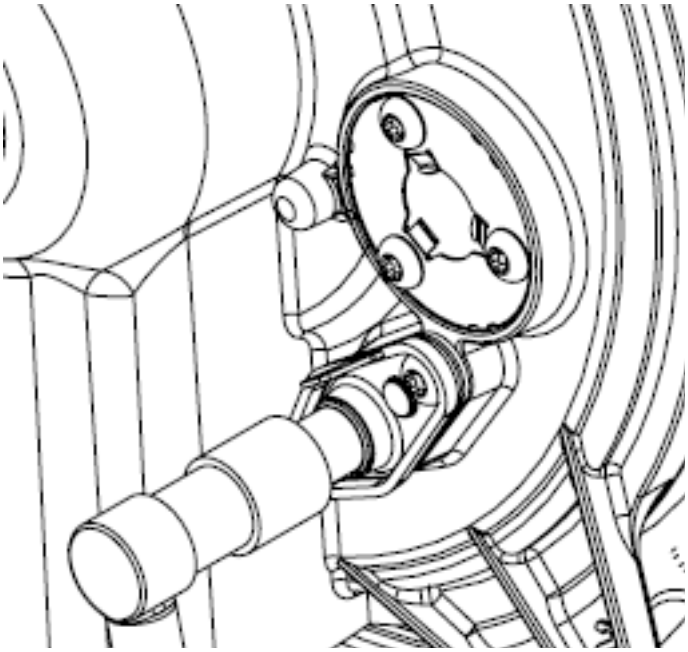

Figure 5.3. Ignition Electrode

0084_00.W210424

Please follow the steps listed in replacement of components FIRST STAGE

1. Unplug the ignition lead form the electrode.
2. Remove the earth lead from the ignition electrode.
3. Remove the burner.
4. Remove the 2 screws holding the ignition electrode to the combustion chamber.
5. Remove the electrode.
6. Fit the new ignition electrode, using a new gasket.
7. Ensure the correct distances are maintained between the electrode and burner.
8. Reassemble in reverse order.

Please follow the step listed in replacement of components FINAL STAGE.

5.7. Nozzle Replacement

CAUTION

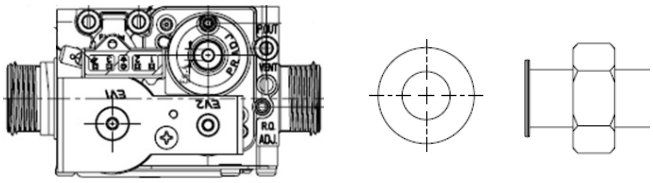

Figure 5.4. Gas Valve & Nozzle

0085_00.W210424

Please follow the steps listed in replacement of components FIRST STAGE

1. Disconnect the electrical leads from the fan.
2. Remove the clip securing the flexible gas pipe to the venturi and remove the gas pipe from the venturi.
3. Loosen the union nut on the outlet of the gas valve and remove the flexible gas pipe from the boiler.
4. Ensure the code on the new nozzle is the correct code to work with your appliance.
5. Discard the old injector and install the new nozzle.
6. Reassemble the above parts in reverse order.
7. Restore the gas and electric supply to the boiler.

Please follow the step listed in replacement of components FINAL STAGE.

5.8. FLOW & RETURN TEMPERATURE SENSOR Replacement

CAUTION

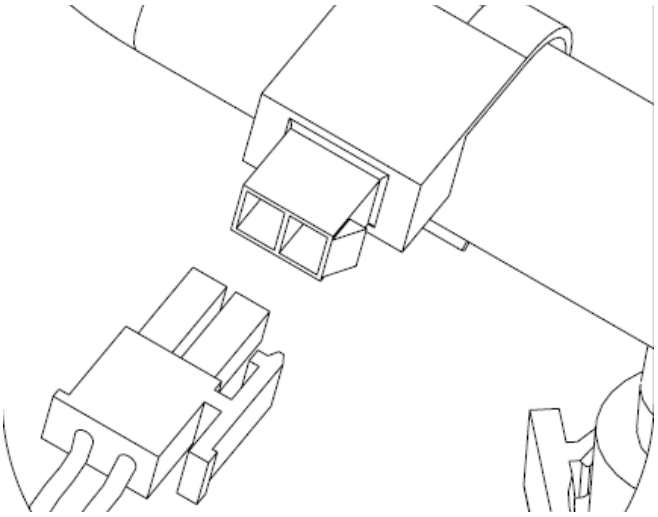

Figure 5.5. The Flow or Return Temperature Sensor Unit. 0086_00.W210424

Please follow the steps listed in replacement of components FIRST STAGE

1. Disconnect the sensor lead from the flow or return thermistor unit.
2. Unclip and remove the flow or return thermistor from the pipe work and withdraw the sensor from the boiler.
3. Re-fit the thermistor to the pipe work and ensure it is securely clipped and in good contact with the pipe work and located into the locator tab.
4. Re-connect the thermistor lead to the thermistor.

Please follow the step listed in replacement of components FINAL STAGE.

5.9. Main PCB Replacement

CAUTION

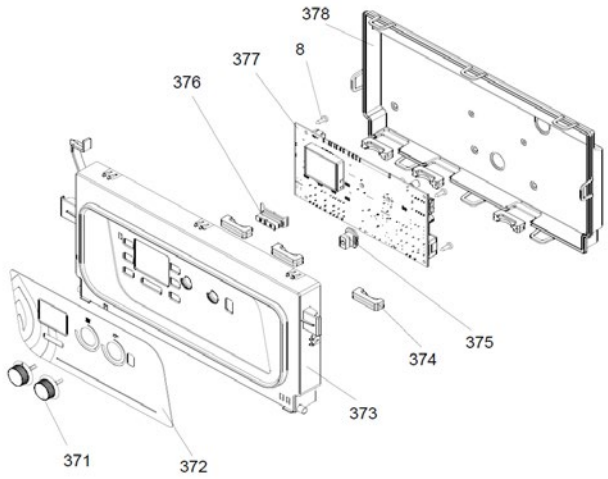

Figure 5.6. Glowa control panel

Please follow the steps listed in replacement of components – FIRST STAGE

1. Carefully remove the 8 retaining clips and remove the control box cover.
2. Remove the 2 screws that secure the PCB.
3. Gently spread the two side retaining clips and lift the PCB upwards ensuring it clears the four corner locating posts.
4. Unplug all electrical connections from the PCB and make a note of where each connection is located (wiring diagram can be used in reference for connection locations)
5. Check P00 value on the parameter list
6. Check P01 value on the parameter list
7. Check P02 value on the parameter list
8. Check P09 value on the parameter list
9. Check A04 value on the parameter list
10. Check A05 value on the parameter list
11. Check A06 value on the parameter list
12. Check A07 value on the parameter list
13. Check A23 value on the parameter list
14. Check A62 value on the parameter list
15. Check A62 value on the parameter list

Please follow the step listed in replacement of components FINAL STAGE.

5.10. 3-Way Inner Kit Replacement - TOP

CAUTION

Please follow the steps listed in replacement of components – FIRST STAGE

1. Refer to the Draining the Boiler CH circuit section
2. Remove the diverter valve actuator and place safely within the boiler.
3. Unscrew the top brass connection nut and withdraw the 3 way valve inner cartridge upwards and out of the boiler.
4. Ensure the brass manifold is clean.
5. Screw the new 3 way valve inner cartridge into the brass manifold ensuring the spindle connects and fits into the bottom O-ring, tighten the cartridge.
6. Re-pressurise the boiler and bleed all excess air.
7. Re-connect the diverter valve actuator.

Please follow the step listed in replacement of components FINAL STAGE.

5.11. Pump Head Replacement

CAUTION

Please follow the steps listed in replacement of components – FIRST STAGE

1. Refer to the Draining the Boiler CH circuit section.
2. Disconnect the electrical connector plugs from the pump.
3. Remove the 4 x screws securing the pump head.
4. Remove the pump head and ensure the pump head housing is clean.
5. Install the new pump head and secure the 4 x pump head securing screws.
6. Reconnect the electrical connector plugs to the pump.
7. Re-pressurise the boiler and bleed all excess air.

Please follow the step listed in replacement of components FINAL STAGE.

5.12. Outlet Manifold Replacement

CAUTION

Please follow the steps listed in replacement of components – FIRST STAGE

1. Refer to the Draining the Boiler CH and DHW circuit section
2. Remove the diverter valve actuator and place safely within the boiler.
3. Remove the flow pipe from the outlet manifold
4. Disconnect the CH flow and DHW isolation valve connections from underneath the boiler
5. Remove the LHS plate heat exchanger securing screw
6. Remove the outlet manifold securing screw at the bottom of the boiler and lift the manifold up and out of the boiler
7. Fit the new outlet manifold in reverse order
8. Re-pressurise the boiler and bleed all excess air.
9. Re-connect the diverter valve actuator.

Please follow the step listed in replacement of components FINAL STAGE.

5.13. Water Pressure Sensor Replacement

CAUTION

Please follow the steps listed in replacement of components – FIRST STAGE.

1. Refer to draining the boiler CH circuit section.
2. Remove the electrical connector from the water pressure sensor and unscrew the sensor from the housing.
3. Ensure the housing is clean and replace the gasket if required.
4. Fit the new water pressure sensor and re-connect the electrical connector.
5. Re-pressurise the boiler and bleed all excess air.

Please follow the step listed in replacement of components FINAL STAGE.

5.14. 3 Bar Safety Valve Replacement

CAUTION

Please follow the steps listed in replacement of components – FIRST STAGE.

1. Refer to the Draining the Boiler CH circuit section
2. Release the set screw holding in the PRV.
3. Undo the connection from the PRV to the copper stub pipe
4. Gently pull the PRV forward away from the boiler to remove.
5. Ensure the new PRV sealing O-ring is free from damage and is suitably greased.
6. Push the PRV into the hydraulic housing and ensure it correctly locates.
7. Tighten up the set screw and check the fiber gasket for the copper stub pipe is in good condition, if not replace and re-connect the PRV copper stub pipe back to the PRV.
8. Check the PRV terminal (if possible) has not been affected by the PRV replacement.
9. Re-pressurise the boiler and bleed all excess air.

Please follow the step listed in replacement of components FINAL STAGE.

5.15. DHW Flow Sensor Replacement (for combi boilers only)

CAUTION

Please follow the steps listed in replacement of components – FIRST STAGE.

1. Carefully lift off the DHW sensor.
2. Remove the electrical connection.
3. Transfer the electrical connection to the new sensor.
4. Clip the new sensor back into place.

Please follow the step listed in replacement of components FINAL STAGE.

5.16. DHW Plate Heat Exchanger Replacement (for combi boilers only)

CAUTION

Please follow the steps listed in replacement of components – FIRST STAGE.

1. Refer to Draining the Boiler CH circuit and DHW circuit.
2. Remove the 2 x Allen screws securing the plate heat exchanger to the boiler manifold.
3. Carefully push back the plate heat exchanger and lift clear of the boiler, ensure suitable protection to the electrics due to any dripping water from the plate heat exchanger.
4. Replace the O-ring seals and lift the plate heat exchanger back into the boiler.
5. The mounting pins are offset to ensure the correct installation of the plate heat exchanger.
6. Tighten up the 2 x Allen key screws and refill the boiler, then test for leaks.

Please follow the step listed in replacement of components FINAL STAGE.

5.17. Electrode Positioning For 20, 24, 28, 33 kW & Single Electrode

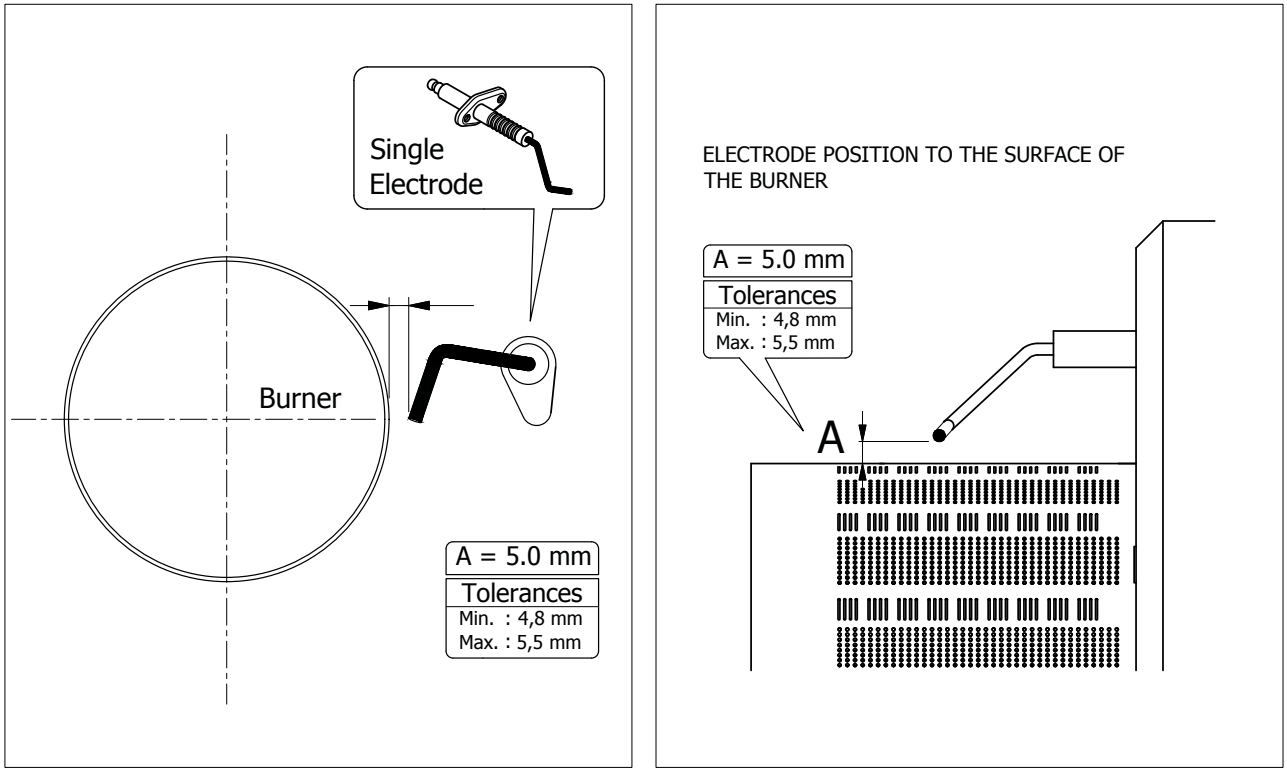

Attention 1: IF electrode changed OR re-calibrated; THEN performing Au-TO or MA-NU calibration mandatory.
Attention 2: Electrode must be replaced with ONLY Original Warmhaus Part

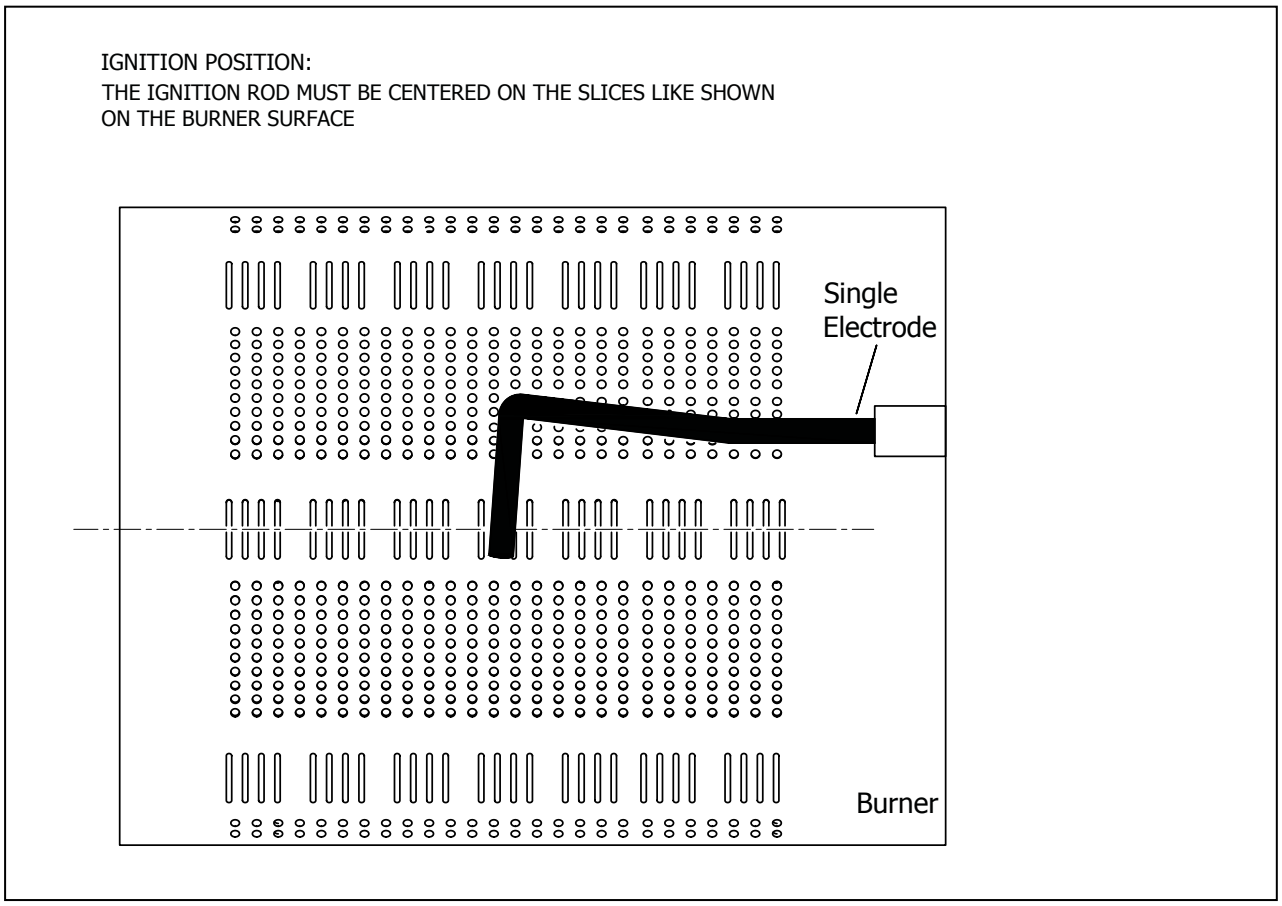

Figure 5.7. Glowa Electrode Positioning [24_28_33 kW]

0088_00.W170326

6. GLOWA TROUBLESHOOTING

FAILURE CODE	FAILURE TYPE	DESCRIPTION	TYPE
Er 02	Low Water Pressure	"""Water pressure sensor configuration (P09 = 1 or 2) If water pressure is <= 0.4bar this error is given. If water pressure is >= 1.0bar error is cleared automatically. Water pressure switch configuration If water pressure switch contacts are opened for 3 seconds; this failure is given. Failure is cleared automatically if the contacts are closed."""	Failure
Er 03	High Water Pressure	"""Available only in water Pressure Sensor configuration (P09 = 1 or 2) If water pressure is >=3.5bar this error is given. If water pressure is <=3.0bar error is cleared automatically."""	Failure
Er 04	DHW NTC probe error	"If DHW NTC probe is open or short circuit, or it is damaged this warning is given. Normal operation is started when error has disappeared. This warning is given but the device works with CH NTC probe temperature during DHW operation."	Warning
Er 05	CH flow NTC probe error	If CH flow NTC probe is open or short circuit, or it is damaged this error is given. Both DHW and CH demand is stopped during this error. Normal operation is restarted when error has disappeared.	Failure
Er 06	Ionization error	If there are 3 consecutive flame errors when Gas Type is selected as NG or 1 flame error when Gas Type is selected as LPG, this lockout is given. RESET action is required in order to reset the failure.	Lockout
Er 07	"Safety thermostat open"	If safety thermostat is opened for 3 sec this lockout is given. Safety thermostat should be closed and RESET action is required in order to reset the failure.	Lockout
Er 08	Ionization Component Error	If the flame detection signal is out of range for 15 seconds this error is given. If the flame detection signal is in normal range for 2 seconds, normal operation restarts.	Failure
Er 09	Pump Encoder Signal Missing or out of range	This error is given for only A23 is selected as “PWM pump”. If the encoder signal is missing or out of range for 10 seconds, this failure is given. If signal is in range for 5 seconds normal operation restarts automatically.	Failure
Er 10	CH Return NTC probe error	If there is a problem in CH Return NTC probe (open/short circuit) this error is given. Normal operation is started when error has disappeared.	Failure
Er 13	Flue Gas NTC High Temperature	This error is given for only A53 is selected as “Flue gas sensor available”. If flue gas ntc probe is above 95°C for 3 seconds, this lockout is given. RESET is required to reset the lockout.	Lockout
Er 14	Flue Gas NTC probe error	If there is a problem in Flue Gas NTC probe (open/short circuit) this error is given. Both DHW and CH demand is stopped during this error. Normal operation is restarted when error has disappeared. This error is given only if A53 is selected as flue gas temperature sensor available.	Failure
Er 15	Fan Encoder Signal Missing Lockout	If the fan is ON and no signal is received from fan encoder for 5 seconds, this lockout is given. RESET is required to reset the lockout.	Lockout
Er 18	Freeze Failure	If CH temperature probe measures below 1°C for 10 seconds, this error is given. Burner is stopped. Pump is not activated. If the temperature increases to 3°C, normal operation is started automatically.	Failure
Er 020	CH Flow NTC over temperature	If temperature of CH Flow NTC probe is higher than 95°C this error is given, when temperature decreases to 85°C, normal operation is started automatically.	Failure
Er 22	False Flame Error	If a false flame is detected at least for 10 seconds while the burner is OFF, this error is given. In these 10 second times, the operation does not go on, operation waits for the flame signal being off to continue burner switching on. If the flame signal is off at least for 1 sec, normal operation restarts.	Failure
Er 41	"Flame loss occurred too many times recently failure"	If flame loss occurred in less than 30 seconds after flame occurrence and at least 6 successive times, this error is given. RESET action is required in order to reset the failure.	Lockout
Er 80	Gas Valve Feedback	In case of an error related with Gas Valve drive and feedback check circuitry, this failure is given. RESET is required in order to reset the failure.	Lockout
Er 91	Recuperator Error	This error is given for only A63 is selected as “Recuperator available”. If water is detected in recuperator for 4 seconds this error given. If water is cleared normal operation restarts automatically.	Failure
Er 96	Fan Encoder Signal Out of Range Lockout	"""If measured RPM is different from target RPM by a defined range (defined range is target ±10% with a minimum of 600rpm) for 60 seconds, this lockout is given. If fan PWM duty cycle is lower than the calculated duty cycle by A62 parameter for 20 seconds, this lockout is given. RESET is required to reset the lockout."""	Lockout

(1) Call the Authorised Service if failure continues.

Benchmark Commissioning & Warranty Validation Service Record

It is a requirement that the boiler is installed and commissioned to the manufacturers' instructions and the data fields on the commissioning checklist completed in full.

To instigate the boiler warranty the boiler needs to be registered with the manufacturer within one month of the installation. The warranty rests with the end-user (consumer), and they should be made aware it is ultimately their responsibility to register with the manufacturer, within the allotted time period.

It is essential that the boiler is serviced in line with the manufacturers' recommendations, at least annually. This must be carried out by a competent Gas Safe registered engineer. The service details should be recorded on the Benchmark Service and Interim Boiler Work Record and left with the householder. Failure to comply with the manufacturers' servicing instructions and requirements will invalidate the warranty.

benchmark
COLLECTIVE MARK
THE MARK OF QUALITY FOR THE INSTALLATION, COMMISSIONING AND SERVICING OF DOMESTIC HEATING AND HOT WATER SYSTEMS

www.hhic.co.uk

This Commissioning Checklist is to be completed in full by the competent person who commissioned the boiler as a means of demonstrating compliance with the appropriate Building Regulations and then handed to the customer to keep for future reference.

Failure to install and commission according to the manufacturers' instructions and complete this Benchmark Commissioning Checklist will invalidate the warranty. This does not affect the customer's statutory rights.

* All installations in England and Wales must be notified to Local Authority Building Control (LABC) either directly or through a Competent Persons Scheme. A Building Regulations Compliance Certificate will then be issued to the customer.

© Heating and Hotwater Industry Council (HHIC)

benchmark
COLLECTIVE MARK
THE MARK OF QUALITY FOR THE INSTALLATION, COMMISSIONING AND SERVICING OF DOMESTIC HEATING AND HOT WATER SYSTEMS

www.centralheating.co.uk

All descriptions and illustrations provided in this document have been carefully prepared but we reserve the right to make changes and improvements in our products which may affect the accuracy of the information contained in this leaflet. All goods are sold subject to our standard Conditions of Sale which are available on request.

GAS BOILER SYSTEM COMMISSIONING CHECKLIST & WARRANTY VALIDATION RECORD

| | | |

SERVICE & INTERIM BOILER WORK RECORD

It is recommended that your boiler and heating system are regularly serviced and maintained, in line with manufacturers' instructions, and that the appropriate service / interim work record is completed.

When completing a service record (as below), please ensure you have carried out the service as described in the manufacturers' instructions. Always use the manufacturers' specified spare parts.

Service provider

SERVICE/INTERIM WORK ON BOILER delete as appropriate			Date:	
Engineer name:		Company name:		
Telephone No:		Gas Safe registration No:		
Max rate	CO ppm	CO^2 %	CO/CO^2	
Min rate	CO ppm	CO^2 %	CO/CO^2	
Where possible, has a flue integrity check been undertaken in accordance with manufacturers' instructions, and readings are correct?"			yes	
Gas rate:	m^3/h	OR	ft^3/h	
Were parts fitted?delete as appropriate		Yes	No	
Parts fitted:				
System inhibitor concentration has been checked and appropriate action taken, in accordance with BS 7593 and boiler manufacturers' instructions. *			yes	n/a
Comments:				
Signature:				

SERVICE/INTERIM WORK ON BOILER delete as appropriate			Date:	
Engineer name:		Company name:		
Telephone No:		Gas Safe registration No:		
Max rate	CO ppm	CO^2 %	CO/CO^2	
Min rate	CO ppm	CO^2 %	CO/CO^2	
Where possible, has a flue integrity check been undertaken in accordance with manufacturers' instructions, and readings are correct?"			yes	
Gas rate:	m^3/h	OR	ft^3/h	
Were parts fitted?delete as appropriate		Yes	No	
Parts fitted:				
System inhibitor concentration has been checked and appropriate action taken, in accordance with BS 7593 and boiler manufacturers' instructions. *			yes	n/a
Comments:				
Signature:				

SERVICE/INTERIM WORK ON BOILER delete as appropriate			Date:	
Engineer name:		Company name:		
Telephone No:		Gas Safe registration No:		
Max rate	CO ppm	CO^2 %	CO/CO^2	
Min rate	CO ppm	CO^2 %	CO/CO^2	
Where possible, has a flue integrity check been undertaken in accordance with manufacturers' instructions, and readings are correct?"			yes	
Gas rate:	m^3/h	OR	ft^3/h	
Were parts fitted?delete as appropriate		Yes	No	
Parts fitted:				
System inhibitor concentration has been checked and appropriate action taken, in accordance with BS 7593 and boiler manufacturers' instructions. *			yes	n/a
Comments:				
Signature:				

SERVICE/INTERIM WORK ON BOILER delete as appropriate			Date:	
Engineer name:		Company name:		
Telephone No:		Gas Safe registration No:		
Max rate	CO ppm	CO^2 %	CO/CO^2	
Min rate	CO ppm	CO^2 %	CO/CO^2	
Where possible, has a flue integrity check been undertaken in accordance with manufacturers' instructions, and readings are correct?"			yes	
Gas rate:	m^3/h	OR	ft^3/h	
Were parts fitted?delete as appropriate		Yes	No	
Parts fitted:				
System inhibitor concentration has been checked and appropriate action taken, in accordance with BS 7593 and boiler manufacturers' instructions. *			yes	n/a
Comments:				
Signature:				

SERVICE/INTERIM WORK ON BOILER delete as appropriate			Date:	
Engineer name:		Company name:		
Telephone No:		Gas Safe registration No:		
Max rate	CO ppm	CO^2 %	CO/CO^2	
Min rate	CO ppm	CO^2 %	CO/CO^2	
Where possible, has a flue integrity check been undertaken in accordance with manufacturers' instructions, and readings are correct?"			yes	
Gas rate:	m^3/h	OR	ft^3/h	
Were parts fitted?delete as appropriate		Yes	No	
Parts fitted:				
System inhibitor concentration has been checked and appropriate action taken, in accordance with BS 7593 and boiler manufacturers' instructions. *			yes	n/a
Comments:				
Signature:				

GLOWA 2025 C
GLOWA 2530 C
GLOWA 3035 C
GLOWA 3540 C

CONDENSING COMBI BOILERS
INSTALLATION & SERVICE MANUAL

NOTES FOR THE USER & INSTALLER

NATIONAL GRID UK EMERGENCY NUMBERS

Enquiries about assets

If you have any questions about our power cables, gas lines, or other assets, please contact Cadent's Plant Protection team. Cadent provide first-line support for our assets.

- **0800 688 588**
- plantprotection@cadentgas.com
- https://www.nationalgrid.com/uk/contact-us

Gas Emergencies
If you smell gas or have accidentally hit the NTS pipeline please call us urgently:
0800 111 999

Electricity Emergencies
If you spot a potential hazard on or near an overhead electricity line please call us urgently:
0800 40 40 90

FOR ANY TECHNICAL QUERIES PLEASE RING THE WARMHAUS CONSUMER / INSTALLER / TECHNICAL HELPLINE:
0207 1646233

Glowa Combi Installation & Service Manual-(UK) Code : 150.11.606.000265
Revision No/Date: R05/01.2026

warmhaus